Carleton University | Department of Chemistry

Nanoscience Catalogue Year 2025-26

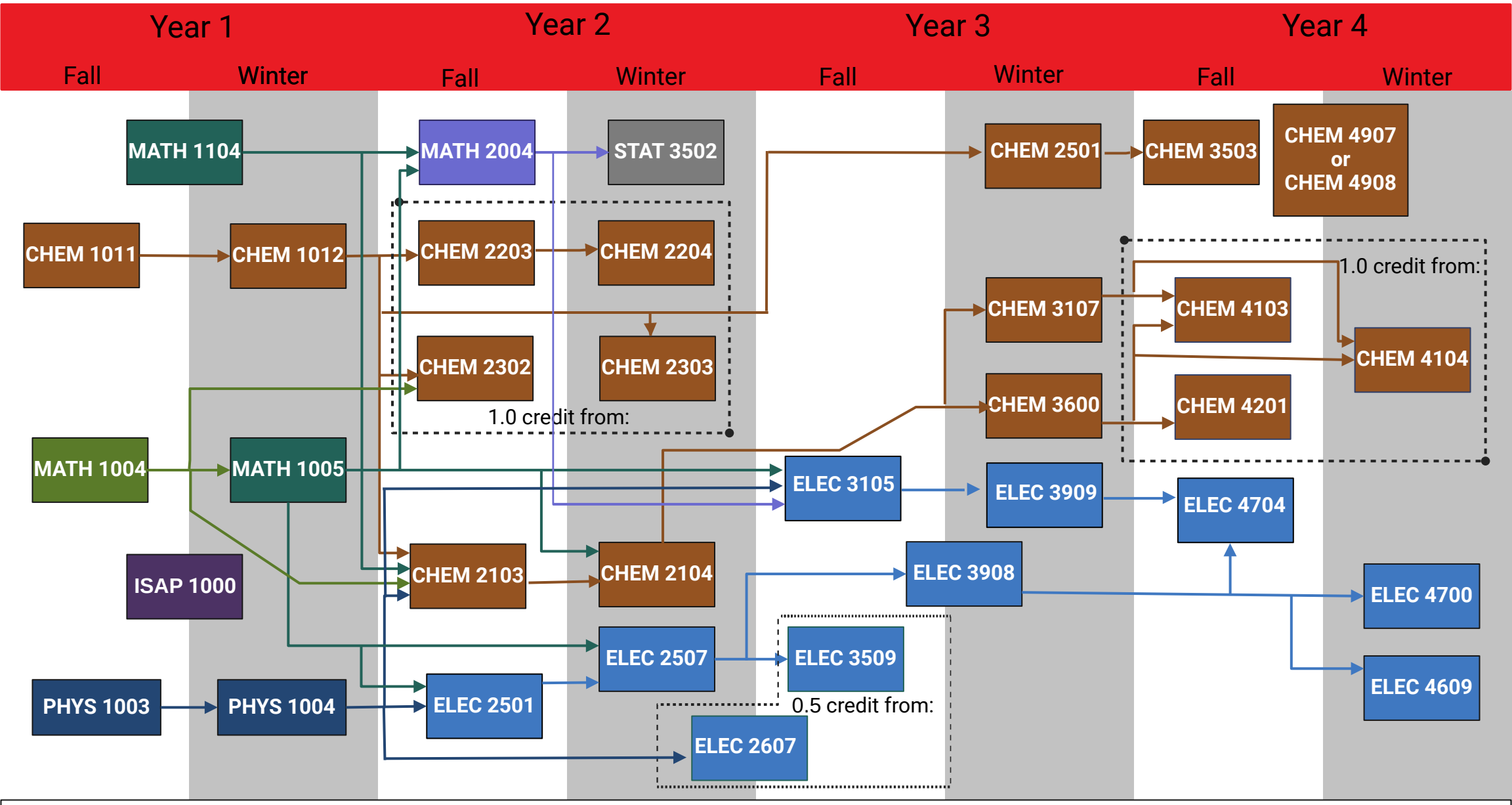

1.5 credit outside of Sciences and FED
0.5 credit in Science at the 2000-level or higher (not in CHEM)
1.5 credits in Science at the 2000-level or higher
1.0 credit in Free Electives