Carleton University Simulator Project

CUSP

Josh Stubbington and Ana Alarcon

March 4, 2019

Motivation

- Simulation use is widespread and increasing
- Strategic importance for Canada (world's largest manufacturer)
- Carleton leadership in simulation education and research

Photo courtesy of TRU Simulation + Training Inc.

Photo courtesy of CAE Inc.

CUSP

@cusimulator

CUSP

@cusimulator

Limitations of current devices

- Cannot reproduce extreme flight manoeuvre accurately ex: stall, spin
- Actuator limits of platform

CUSP

@cusimulator

Objective

- To develop a unique, state-of-the-art, complete, and flexible simulation facility at Carleton
  - Novel motion platform
  - Reconfigurable
  - Full sensory cueing
  - HLA compliant (IEEE 1516)

CUSP

Carleton University Simulator Project - CUSP

Atlas Simulator Facility

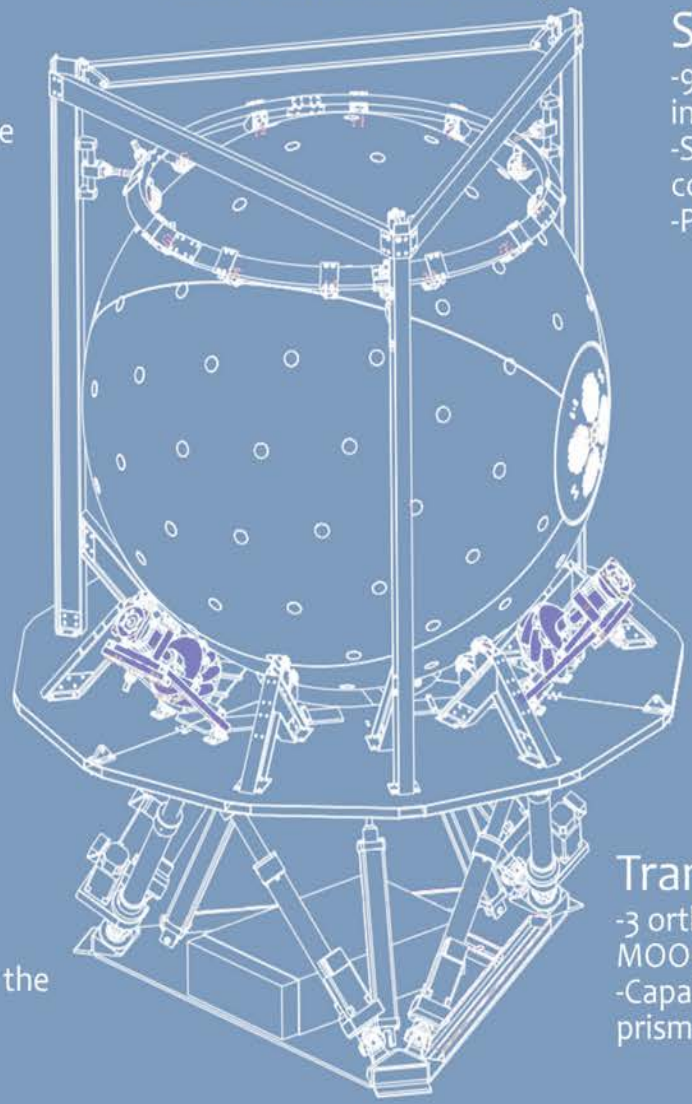

Software

-In-house developed distributed computing environment (CUSP Simple Infrastructure - CSI)
-Interface to X-plane flight simulation software

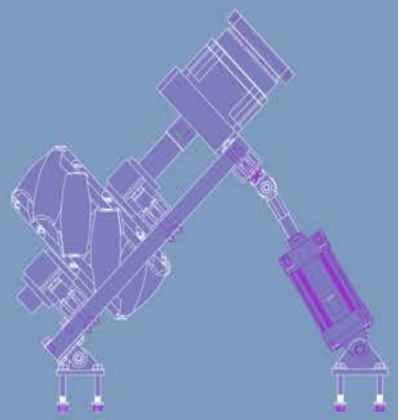

Sphere

-9.5 foot composite spherical capsule is integral to the actuation system
-Self-contained computing and pilot interface components
-Pilot experiences immersive flight simulation

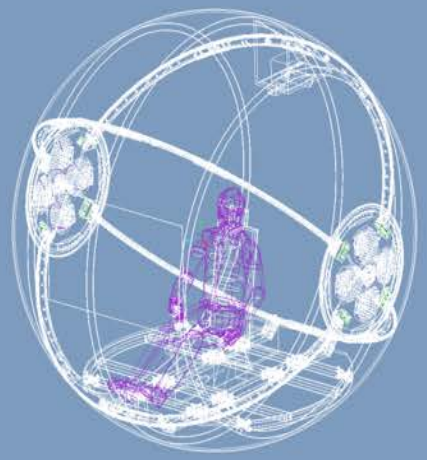

Angular Actuation

-3 powered 8 inch mecanum wheels provide unbounded rotation
-24 passive mecanum wheels support the capsule in all directions

Translational Actuation

-3 orthogonal translations provided by commercial MOOG stewart-gough platform
-Capable of developing high acceleration using 6 prismatic actuators and 3 passive pneumatic struts

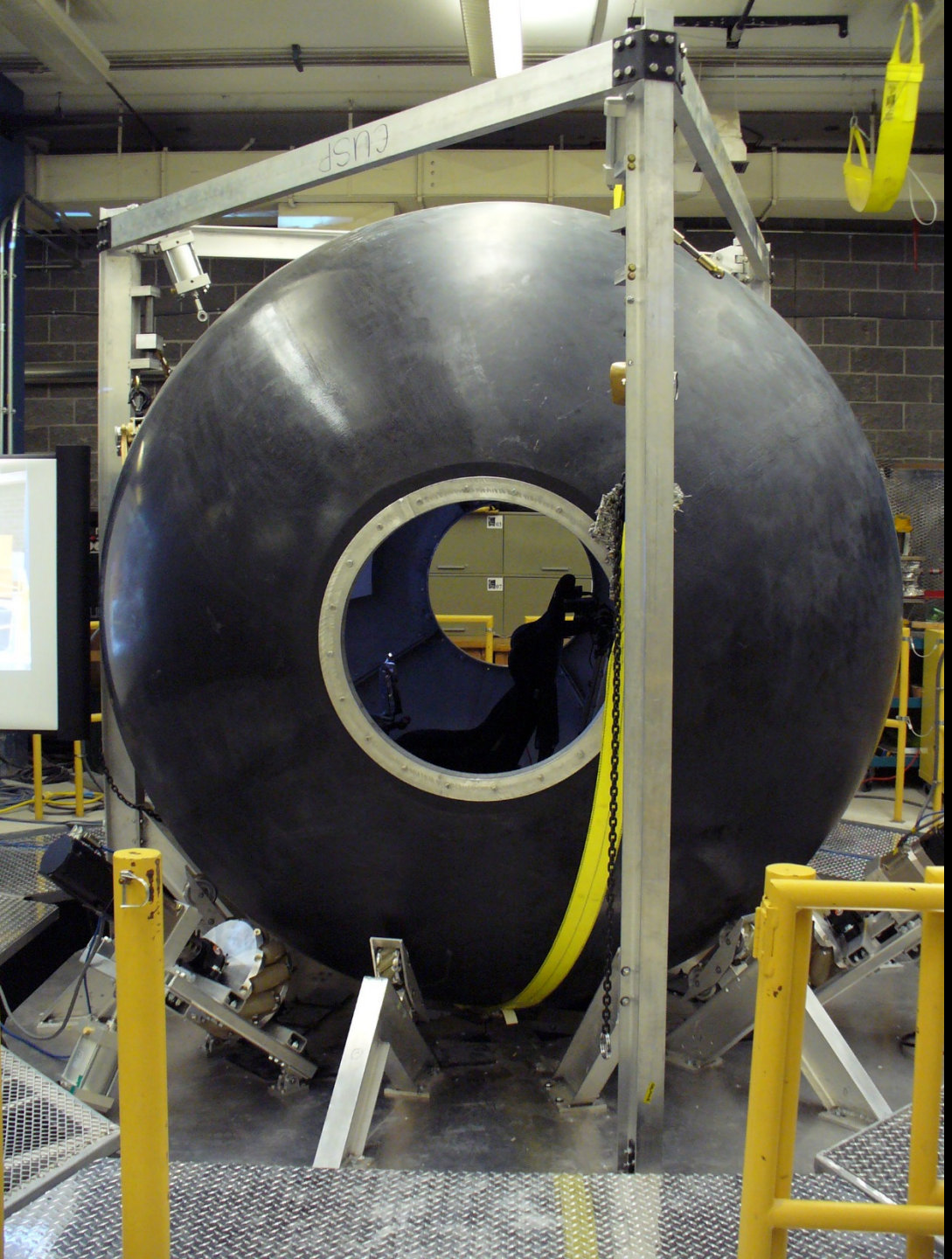

2018-2019 team includes

- 2 BIO MECH
- 11 MECH
- 1 AERO A
- 2 AERO C
- 1 AERO D

CUSP

@cusimulator

2018 / 2019 Overview

- Structures
  - Design and analysis of structural component
  - Ex: Sphere, upright structure, wheels
- Actuation
  - Dynamic modelling
  - Pneumatics
  - Visual orientation
- Controls
  - Orientation systems
  - Internal hardware components
  - Overhaul system architecture
  - Motion implementation

CUSP

@cusimulator

CUSP

@cusimulator

CUSP

- For additional information
  - Web: http://cusp.mae.carleton.ca
  - Instagram: @cusimulator
  - Project manager: John.Hayes@carleton.ca; tel. 5661
  - Contact current CUSP students or lead engineers
  - Winter design review: April 6, 09:00-18:00, University Centre