Accepted Manuscript

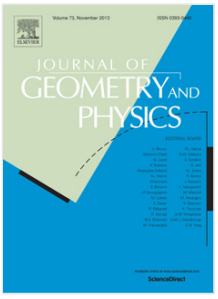

Symplectic reduction of holonomic open-chain multi-body systems with constant momentum

Robin Chhabra, M. Reza Emami

PII: S0393-0440(14)00281-2
DOI: http://dx.doi.org/10.1016/j.geomphys.2014.12.011
Reference: GEOPHY 2489

To appear in: *Journal of Geometry and Physics*

Received date: 10 March 2014
Accepted date: 16 December 2014

Please cite this article as: R. Chhabra, M.R. Emami, Symplectic reduction of holonomic open-chain multi-body systems with constant momentum, *Journal of Geometry and Physics* (2014), http://dx.doi.org/10.1016/j.geomphys.2014.12.011

Geometry and Physics manuscript No.
(will be inserted by the editor)

Symplectic Reduction of Holonomic Open-chain Multi-body Systems with Constant Momentum

Robin Chhabra · M. Reza Emami

Received: date / Accepted: date

Abstract This paper presents a two-step symplectic geometric approach to the reduction of Hamilton's equation for open-chain, multi-body systems with multi-degree-of-freedom holonomic joints and constant momentum. First, symplectic reduction theorem is revisited for Hamiltonian systems on cotangent bundles. Then, we recall the notion of displacement subgroups, which is the class of multi-degree-of-freedom joints considered in this paper. We briefly study the kinematics of open-chain multi-body systems consisting of such joints. And, we show that the relative configuration manifold corresponding to the first joint is indeed a symmetry group for an open-chain multi-body system with multi-degree-of-freedom holonomic joints. Subsequently using symplectic reduction theorem at a non-zero momentum, we express Hamilton's equation of such a system in the symplectic reduced manifold, which is identified by the cotangent bundle of a quotient manifold. The kinetic energy metric of multi-body systems is further studied, and some sufficient conditions are introduced, under which the kinetic energy metric is invariant under the action of a subgroup of the configuration manifold. As a result, the symplectic reduction procedure for open-chain, multi-body systems is extended to a two-step reduction process for the dynamical equations of such systems. Finally, we explicitly derive the reduced dynamical equations in the local coordinates for an example of a six-degree-of-freedom manipulator mounted on a spacecraft, to demonstrate the results of this paper.

Keywords open-chain multi-body system · differential forms · Hamiltonian dynamics · momentum map · symplectic reduction

R. Chhabra
University of Toronto Institute for Aerospace Studies, 4925 Dufferin Street Toronto, ON, M3H 5T6, Canada.
E-mail: chhabrar@utias.utoronto.ca

M. R. Emami (✉)
University of Toronto Institute for Aerospace Studies, 4925 Dufferin Street Toronto, ON, M3H 5T6, Canada.
Tel.: +1 416 946 3357
Fax: +1 416 946 7109
E-mail: emami@utias.utoronto.ca

Operators

L_r	Left composition/translation by r
R_r	Right composition/translation by r
K_r	Conjugation by r
Ad_r	Adjoint operator corresponding to r
ad_ξ	adjoint operator corresponding to ξ
$[\xi, \eta]$	Lie bracket or matrix commutator
$T_m f$	Tangent map corresponding to the map f at the element m
$T_m^* f$	Cotangent map corresponding to the map f at the element m
$T_m M$	Tangent space of the manifold M at the element m
TM	Tangent bundle of the manifold M
$T_m^* M$	Cotangent space of the manifold M at the element m
$T^* M$	Cotangent bundle of the manifold M
$\exp(\xi)$	Group/matrix exponential of ξ
$Lie(G)$	Lie algebra of the Lie group G
$Lie^*(G)$	Dual of the Lie algebra of the Lie group G
G_μ	Coadjoint isotropy group for $\mu \in Lie^*(G)$
$\ltimes$	Semi-direct product of groups
$\ll \cdot, \cdot \gg$	Euclidean metric
$\|v\|_h$	Norm of the vector v with respect to the metric h
$\langle \cdot, \cdot \rangle$	Canonical pairing of the elements of tangent and cotangent space
$\mathcal{L}_X$	Lie derivative with respect to the vector field X
ξ_M	Vector field on the manifold M induced by the infinitesimal action of $\xi \in Lie(G)$
$\iota_X \Omega$	Interior product of the differential form Ω by the vector field X
$\mathfrak{X}(M)$	Space of all vector fields on the manifold M
$\Omega^2(M)$	Space of all differential 2-forms on the manifold M
$d\Omega$	Exterior derivative of the differential form Ω
dH	Exterior derivative of the function H
M/G	Quotient manifold corresponding to a free and proper action of the Lie group G

1 Introduction

In order to better understand the behaviour of Hamiltonian and Lagrangian systems, researchers have been trying to find *conserved quantities* that are used to integrate a part of dynamical equations, and derive closed-form equations for some parameters of such systems. For example, Jacobi in 1884 introduced Hamilton-Jacobi equations, which give the necessary conditions for integrability of a Lagrangian system [13]. Also, Emmy Noether in 1918 in her famous paper [24] proved that any symmetry of the action functional of a Lagrangian system corresponds to a conserved quantity. This result is an inflection point in identifying conserved quantities, and its relation with the reduction of dynamical equations of a system. By *reducing the dynamical equations* we mean expressing the differential equations representing a (Lagrangian or Hamiltonian) system on a manifold whose dimension is less than the original phase space of the system, by quotienting a group action and eliminating the trivial behaviour of the system or restricting the system

to a submanifold of the phase space. In the following, we first review two existing reduction theories for Hamiltonian and Lagrangian mechanical systems. Then, we report the reduction methods for multi-body systems, and finally, we state the contributions of this paper.

1.1 Background

1.1.1 Reduction Theories

From the geometric point of view, a Hamiltonian system is a vector field X on a symplectic manifold (M, Ω) (phase space) that satisfies (coordinate-independent) Hamilton's equation

$$\iota_X \Omega = dH,$$

where $\iota_X \Omega$ is the interior product of the vector field X with the symplectic form Ω, and the function $H\colon M \to \mathbb{R}$ is the Hamiltonian of the system. In this formulation, if H and Ω are invariant under a group action, then there exists a conserved quantity (*momentum*) for the Hamiltonian system and we can reduce Hamilton's equation [18]. In this reduction process, we have to take care of not only the topology of the phase space and its symplectic structure, but also the Hamiltonian H and its corresponding Hamiltonian vector field X. As for the reduction of the phase space along with its symplectic structure (M, Ω), the symplectic reduction theorem by Marsden and Weinstein [21] gives an instruction to find the reduced phase space and its symplectic structure. In the following, we state this theorem, and report its impact on the geometric mechanics literature.

Let G be a Lie group, and M be the phase space of a system. The symplectic reduction theorem states that in the presence of a free and proper G-action and an (Ad^*-equivariant) momentum map $\mathbf{M}\colon M \to Lie^*(G)$, for any value $\mu \in Lie^*(G)$ of the momentum the quotient manifold $M_\mu := \mathbf{M}^{-1}(\mu)/G_\mu$ inherits a symplectic form Ω_μ. Here, G_μ is the coadjoint isotropy group of μ, Ω_μ is identified by the equality $i_\mu^* \Omega = \pi_\mu^* \Omega_\mu$, and the maps $i_\mu\colon \mathbf{M}^{-1}(\mu) \hookrightarrow M$ and $\pi_\mu\colon \mathbf{M}^{-1}(\mu) \to \mathbf{M}^{-1}(\mu)/G_\mu$ are the canonical inclusion and projection maps [21]. The pair (M_μ, Ω_μ) is called the *symplectic reduced manifold*. This theorem by Marsden and Weinstein made a huge impact on unifying the reduction methods that had been previously developed for Lagrangian and Hamiltonian systems, such as classical Routh method and the reduction of Lagrangian systems by cyclic parameters [26].

For a *mechanical system*, the phase space is the cotangent bundle of the configuration manifold $T^*\mathcal{Q}$ that admits a canonical symplectic 2-form, which is $\Omega_{can} := -dp \wedge dq$, in coordinates. As the result, $(T^*\mathcal{Q}, \Omega_{can})$ is a symplectic manifold. The Hamiltonian of the mechanical system $H\colon T^*\mathcal{Q} \to \mathbb{R}$ comes from a (kinetic energy) metric and a (potential energy) function on $\mathcal{Q}$. Let G be a Lie group acting properly on the configuration manifold $\mathcal{Q}$. The cotangent lifted action on the phase space is symplectic. In this case, if the Hamiltonian of the system is also invariant under the cotangent lift of the G-action, the group G is called the *symmetry group* of the mechanical system, and the system is called a *mechanical system with symmetry* [16,18]. In the reduction process of mechanical systems with symmetry, we should take care of four structures, i.e., the topology

of the phase space, the symplectic structure, the (kinetic energy) metric and the (potential energy) function of the system.

The phase space of a mechanical system $T^*\mathcal{Q}$ also admits a canonical Poisson bracket $\{\cdot,\cdot\}$ using the canonical symplectic form. For a mechanical system with symmetry, suppose that the symmetry group G acts freely and properly on $\mathcal{Q}$, and so does it on $T^*\mathcal{Q}$. Clearly, the Poisson bracket is invariant under the cotangent lifted action, i.e., the action is a Poisson action on $(T^*\mathcal{Q}, \{\cdot,\cdot\})$. The Poisson bracket on $T^*\mathcal{Q}$ descends to a Poisson bracket on the quotient manifold $(T^*\mathcal{Q})/G$. This process, which has been introduced in [18, 2], is called *Poisson reduction*. The major difference between Poisson reduction and symplectic reduction is the concept of momentum map, which is not necessary for Poisson reduction, and as the result the induced Hamilton's equation on the quotient phase space evolves in a bigger space. This approach unifies the Euler-Poincaré and Lagrange-Poincaré equations for mechanical systems with symmetry [18]. Both of the abovementioned reduction theories for mechanical systems with symmetry were developed and extended to Lagrangian systems, in the 1990s [5, 20, 19].

1.1.2 Dynamical Reduction of Multi-body Systems

An example of a mechanical system with symmetry is a free-base multi-body system, which has been studied in the field of robotics, aerospace and controls. Vafa and Dubowsky introduce the notion of Virtual Manipulator [36], and they show that this approach decouples the system centre of mass translation and efficiently solves for the inverse kinematics [9]. Since the trivial behaviour of a multi-body system due to momentum conservation is eliminated during a reduction process, the behaviour of the system is more explicit in the reduced space. The reduction procedures have been helpful for extracting control laws for space manipulators by restricting the dynamical equations to the submanifold of the phase space where the momentum of the system is constant (and equal to zero). Yoshida *et al.* investigate the kinematics of free-floating multi-body systems utilizing the momentum conservation law. They derive a new Jacobian matrix in generalized form and develop a control method based on the resolved motion rate control concept [35, 23]. McClamroch *et al.* also propose an articulated-body dynamical model for free-floating robots based on Hamilton's equation, and apply it for adaptive motion control [37]. In the case of underactuated space manipulators, Mukherjee and Chen in [22] show that even if the unactuated joints do not possess brakes, the manipulator can be brought to a complete rest provided that the system maintains zero momentum. In [34] an alternative path planning methodology is developed for underactuated manipulators using high order polynomials as arguments in cosine functions to specify the desired path directly in joint space.

Geometric methods have also been used to reduce the dynamical model of free-base multi-body systems and introduce effective control laws. For example, in [31, 32] Sreenath reduces Hamilton's equation by $SO(2)$ for free-base planar multi-body systems with non-zero angular momentum. He uses symplectic reduction theory to first reduce dynamical equations and then derive a control law for reorienting the free-base system. Chen in his Ph.D. thesis [6] extends Sreenath's approach to spatial multi-body systems with zero angular momentum. Duindam and Stramigioly derive Boltzmann-Hamel equations for multi-body systems with generalized

multi-degree-of-freedom (multi-d.o.f.) holonomic and nonholonomic joints by restricting the dynamical equations to the nonholonomic distribution [10]. This is the first attempt to reduce the dynamical equations of a generic open-chain multi-body systems with generalized holonomic and nonholonomic joints. Furthermore, Shen proposes a novel trajectory planning in shape space for nonlinear control of multi-body systems with symmetry [29, 27, 28]. In his work he performs symplectic reduction for zero momentum and assumes multi-body systems on trivial bundles. Then, in [30] he extends his results to include nonholonomic constraints. Also, in the control community, Olfati-Saber in his thesis [25] studies the reduction of underactuated Lagrangian mechanical systems with symmetry (with zero momentum) and its application to nonlinear control of such systems. Further, Bloch and Bullo extract coordinate-independent nonlinear control laws for holonomic and nonholonomic mechanical systems with symmetry [2, 3, 4].

1.2 Structure of the Paper and Statement of Contributions

In the robotics community, research on the dynamical reduction of multi-body systems is mostly focused on the cases where the total liner and angular momentum is zero, the symmetry group of the system is either $SO(3)$ or $SO(2)$, and the configuration manifold of the system is a trivial bundle of the symmetry group over the shape space. In the real world applications however, it is impractical to have a system with zero angular and linear momentum. In this paper we systematically develop a two-step reduction process (based on the symplectic reduction theorem) for dynamical equations of holonomic open-chain multi-body systems with non-zero momentum. We consider any symmetry group, which is a subgroup of a Cartesian product of copies of $SE(3)$, and we do not assume that the configuration manifold is a trivial bundle.

The following section gives a brief review of symplectic reduction theory for mechanical systems on cotangent bundles. In Section 3, we introduce generic multi-d.o.f. joints, and show that for a certain class of multi-d.o.f. joints the configuration manifold of the system is indeed diffeomorphic to a Lie group. Then, Lagrangian and Hamiltonian of generic open-chain multi-body systems are derived in Section 4. The main results of this paper are presented in Section 5, where we introduce the notion of open-chain multi-body systems with symmetry, and show that the relative configuration manifold corresponding to the first joint is always a symmetry group for such systems. We derive the reduced coordinate-independent dynamical equations of generic open-chain multi-body systems with symmetry in a vector sub-bundle of the cotangent bundle of the μ-shape space. Subsequently, we find some necessary conditions for a reduced open-chain multi-body system to admit a bigger symmetry group, and we repeat the reduction procedure introduced in this section to further reduce the dynamical equations of these systems. Finally in Section 6, as an example, we reduce the dynamical equations of a six d.o.f. manipulator mounted on a spacecraft, and Section 7 concludes the paper with some remarks.

2 Symplectic Reduction of Holonomic Hamiltonian Mechanical Systems with Symmetry

For a mechanical system, the Lagrangian $L\colon T\mathcal{Q} \to \mathbb{R}$ is defined by $L(v_q) := \frac{1}{2}K_q(v_q, v_q) - V(q)$, where $\forall q \in \mathcal{Q}$ we have $v_q \in T_q\mathcal{Q}$, and $K_q\colon T_q\mathcal{Q} \times T_q\mathcal{Q} \to \mathbb{R}$ is a Riemannian metric, called the *kinetic energy metric*, and where $V\colon \mathcal{Q} \to \mathbb{R}$ is a smooth function, called the *potential energy function*. This Lagrangian is hyper-regular, and its corresponding Legendre transformation $\mathbb{F}L_q\colon T_q\mathcal{Q} \to T_q^*\mathcal{Q}$ is equal to the fibre-wise linear isomorphism that is induced by the metric K:

$$\langle \mathbb{F}L_q(v_q), w_q\rangle := K_q(v_q, w_q). \quad \forall v_q, w_q \in T_q\mathcal{Q} \tag{2.1}$$

As the result, $\forall p_q \in T^*\mathcal{Q}$ the Hamiltonian $H\colon T^*\mathcal{Q} \to \mathbb{R}$ of the system is

$$H(p_q) := \frac{1}{2}K_q(\mathbb{F}L_q^{-1}(p_q), \mathbb{F}L_q^{-1}(p_q)) + V(q), \tag{2.2}$$

which is the total energy of the mechanical system. We label a Hamiltonian mechanical system by a four-tuple $(T^*\mathcal{Q}, \Omega_{can}, H, K)$, where $\Omega_{can} \in \Omega^2(T^*\mathcal{Q})$ is the canonical 2-form on the cotangent bundle $T^*\mathcal{Q}$, and H and K are defined as above.

Let $\mathcal{G}$ be a Lie group with the Lie algebra $Lie(\mathcal{G})$. Consider an action of $\mathcal{G}$ on $\mathcal{Q}$, and denote the action by $\Phi_{\mathfrak{g}}\colon \mathcal{Q} \to \mathcal{Q}$, $\forall \mathfrak{g} \in \mathcal{G}$. This action induces an action of $\mathcal{G}$ on $T^*\mathcal{Q}$ by the cotangent lift of $\Phi_{\mathfrak{g}}$, which is denoted by $T^*\Phi_{\mathfrak{g}}\colon T^*\mathcal{Q} \to T^*\mathcal{Q}$.

Lemma 21. *For every $\mathfrak{g} \in \mathcal{G}$, the map $T^*\Phi_{\mathfrak{g}}$ is a symplectomorphism, i.e., it preserves Ω_{can} [18].*

Consider the infinitesimal action of $Lie(\mathcal{G})$ on $\mathcal{Q}$. For any $\xi \in Lie(\mathcal{G})$, this action induces a vector field $\xi_{\mathcal{Q}} \in \mathfrak{X}(\mathcal{Q})$ such that $\forall q \in \mathcal{Q}$,

$$\xi_{\mathcal{Q}}(q) = \left.\frac{\partial}{\partial \epsilon}\right|_{\epsilon=0} \left(\Phi_{\exp(\epsilon\xi)}(q)\right). \tag{2.3}$$

Denote the fibre-wise linear map corresponding to the infinitesimal action of $Lie(\mathcal{G})$ by $\phi_q\colon Lie(\mathcal{G}) \to T_q\mathcal{Q}$, where $\phi_q(\xi) = \xi_{\mathcal{Q}}(q)$. Likewise, we define $\xi_{T^*\mathcal{Q}} \in \mathfrak{X}(T^*\mathcal{Q})$ such that $\forall p_q \in T_q^*\mathcal{Q}$,

$$\xi_{T^*\mathcal{Q}}(p_q) = \left.\frac{\partial}{\partial \epsilon}\right|_{\epsilon=0} \left(T^*_{\Phi_{\exp(\epsilon\xi)}(q)}\Phi_{\exp(-\epsilon\xi)}(p_q)\right). \tag{2.4}$$

Now, consider the fibre-wise linear map $\mathbf{M}\colon T^*\mathcal{Q} \to Lie^*(\mathcal{G})$, called *momentum map*, which is defined by

$$\langle \mathbf{M}_q(p_q), \xi\rangle := \langle \phi_q^*(p_q), \xi\rangle = \langle p_q, \xi_{\mathcal{Q}}(q)\rangle. \tag{2.5}$$

Lemma 22. *The map $\boldsymbol{M}$ is an Ad^*-equivariant momentum map corresponding to the cotangent lifted action $T^*\Phi_{\mathfrak{g}}$. That is,*

$$\boldsymbol{M} \circ T^*\Phi_{\mathfrak{g}}(p_q) = Ad^*_{\mathfrak{g}} \circ \boldsymbol{M}(p_q). \tag{2.6}$$

Proposition 23 (Noether's Theorem)**.** *Let $H\colon T^*\mathcal{Q} \to \mathbb{R}$ be the Hamiltonian of a Hamiltonian mechanical system. If H is invariant under the cotangent lifted group action, i.e., $H \circ T^*\Phi_{\mathfrak{g}}(p_q) = H(p_q)$, the momentum map $\boldsymbol{M}$, as defined above, is constant along the flow of the Hamiltonian vector field X for the Hamiltonian H. That is, $\forall \xi \in Lie(\mathcal{G})$ we have $\mathcal{L}_X(\langle \boldsymbol{M}, \xi\rangle) = 0$.*

We call $X \in \mathfrak{X}(T^*\mathcal{Q})$ a *Hamiltonian vector field* for the Hamiltonian H, if it satisfies Hamilton's equation:

$$\iota_X \Omega_{can} = dH. \tag{2.7}$$

This equation is a coordinate-independent way of formulating Hamilton's equation in the language of differential forms, which is used mostly in the context of geometric mechanics. This equation is equivalent to the familiar form of the Hamilton's equation in a chosen coordinates (q, p) for $T^*\mathcal{Q}$:

$$\iota_X \Omega_{can} = \iota_{(\dot{q},\dot{p})}(-dp \wedge dq) = \dot{q}dp - \dot{p}dq = \frac{\partial H}{\partial q}dq + \frac{\partial H}{\partial p}dp.$$
$$\Longrightarrow \begin{cases} \dot{p} = -\frac{\partial H}{\partial q} \\ \dot{q} = \frac{\partial H}{\partial p} \end{cases} \tag{2.8}$$

We define a Hamiltonian mechanical system with symmetry to be a five-tuple $(T^*\mathcal{Q}, \Omega_{can}, H, K, \mathcal{G})$, as above, where the Hamiltonian H and K are invariant under the cotangent and tangent lifted action of $\mathcal{G}$.

Theorem 24 (Symplectic Reduction Theorem [21])**.** *Let $\mu \in Lie^*(\mathcal{G})$ be a regular value of the momentum map $\boldsymbol{M}$, and assume that the action of $\mathcal{G}$ on $\mathcal{Q}$ is free and proper. Then the quotient manifold $(T^*\mathcal{Q})_\mu := \boldsymbol{M}^{-1}(\mu)/\mathcal{G}_\mu$, where $\mathcal{G}_\mu = \{\, \mathfrak{g} \in \mathcal{G} |\, Ad^*_{\mathfrak{g}}\mu = \mu\}$ is the coadjoint isotropy group, is a symplectic manifold, called the symplectic reduced space, with the unique symplectic form Ω_μ that is identified by the equality $T^*\pi_\mu(\Omega_\mu) = T^*i_\mu(\Omega_{can})$. Here, the maps $\pi_\mu \colon \boldsymbol{M}^{-1}(\mu) \to \boldsymbol{M}^{-1}(\mu)/\mathcal{G}_\mu$ and $i_\mu \colon \boldsymbol{M}^{-1}(\mu) \hookrightarrow T^*\mathcal{Q}$ are the canonical projection and inclusion map, respectively.*

This theorem was first stated and proved in a paper by Marsden and Weinstein in 1974 [21], and since then this result has been extended to non-free actions [8] and almost symplectic manifolds [12]. An almost symplectic manifold is a manifold equipped with a nondegenerate 2-form. Based on the symplectic reduction theorem, in the presence of a group action that preserves the symplectic structure and an Ad*-equivariant momentum map (corresponding to the symmetry group) we say that the phase space of a Hamiltonian system along with its symplectic 2-form can be reduced to the symplectic reduced space $((T^*\mathcal{Q})_\mu, \Omega_\mu)$. In order to have a well-defined projection of Hamilton's equation onto the symplectic reduced space, the Hamiltonian of the system should be invariant under the group action, as well. Under these hypotheses, Hamilton's equation can be written on $(T^*\mathcal{Q})_\mu$ as

$$\iota_{X_\mu} \Omega_\mu = dH_\mu, \tag{2.9}$$

where H_μ is defined by $H \circ i_\mu = H_\mu \circ \pi_\mu$ and $X_\mu \circ \pi_\mu = T\pi_\mu(X \circ i_\mu)$.

We say that the Hamiltonian system with symmetry $(T^*\mathcal{Q}, \Omega_{can}, H, \mathcal{G})$ has been reduced to the Hamiltonian system $((T^*\mathcal{Q})_\mu, \Omega_\mu, H_\mu)$.

In the theory of cotangent bundle reduction, there exist two equivalent ways to identify the symplectic reduced space with cotangent bundles and coadjoint orbits [17]:

i) Embedding version: in which the symplectic reduced space is identified with a vector sub-bundle of the cotangent bundle of $\widetilde{\mathcal{Q}} := \mathcal{Q}/\mathcal{G}_\mu$, called *$\mu$-shape space* of a Hamiltonian system.

ii) Bundle version: in which the symplectic reduced space is identified by a (locally trivial) fibre bundle of the coadjoint orbit through μ over the cotangent bundle of $\overline{\mathcal{Q}} := \mathcal{Q}/\mathcal{G}$, namely *shape space* of the Hamiltonian system.

In this paper, the embedding version of the cotangent bundle reduction is used to write Hamilton's equation (2.9) in the cotangent bundle of the μ-shape space, i.e., $T^*\widetilde{\mathcal{Q}}$. Prior to reporting the final result, we introduce a number of necessary objects.

Consider a Hamiltonian mechanical system with symmetry $(T^*\mathcal{Q}, \Omega_{can}, K, H, \mathcal{G})$, and $\forall \mathfrak{g} \in \mathcal{G}$ denote the action map by $\Phi_{\mathfrak{g}} \colon \mathcal{Q} \to \mathcal{Q}$. Assume that the action is free and proper. The quotient manifold $\overline{\mathcal{Q}} := \mathcal{Q}/\mathcal{G}$ gives rise to the principal bundle $\overline{\pi} \colon \mathcal{Q} \to \overline{\mathcal{Q}}$ with the base space $\overline{\mathcal{Q}}$, and the fibres of the bundle are isomorphic to the group $\mathcal{G}$. A *principal connection* on the principle bundle $\overline{\pi} \colon \mathcal{Q} \to \overline{\mathcal{Q}}$ is a fibre-wise linear map $\mathcal{A} \colon T\mathcal{Q} \to Lie(\mathcal{G})$, such that $\mathcal{A}(\xi_{\mathcal{Q}}(q)) = \xi$ ($\forall \xi \in Lie(\mathcal{G})$ and $\forall q \in \mathcal{Q}$), and it is Ad-equivariant, i.e., $\mathcal{A}(T_q\Phi_{\mathfrak{g}}(v_q)) = \mathrm{Ad}_{\mathfrak{g}}\mathcal{A}(v_q)$ ($\forall v_q \in T_q\mathcal{Q}$). Accordingly, for any base element $q \in \mathcal{Q}$ the tangent space of $\mathcal{Q}$ can be written as the following direct sum

$$T_q\mathcal{Q} = \ker(T_q\overline{\pi}) \oplus \ker(\mathcal{A}_q). \tag{2.10}$$

Note that, $\mathcal{V} := \ker(T\overline{\pi}) = \{\xi_{\mathcal{Q}} = \phi(\xi) | \, \xi \in Lie(\mathcal{G})\}$ is called the *vertical* vector sub-bundle of $T\mathcal{Q}$, and $\mathcal{H} := \ker(\mathcal{A})$ is called the *horizontal* vector sub-bundle of $T\mathcal{Q}$. As a result, any $v_q \in T_q\mathcal{Q}$ can be decomposed into the horizontal and vertical components such that $v_q = \mathrm{hor}(v_q) + \mathrm{ver}(v_q)$, where $\mathrm{ver}(v_q) := \phi_q \circ \mathcal{A}_q(v_q)$ and $\mathrm{hor}(v_q) := v_q - \mathrm{ver}(v_q)$.

For any $q \in \mathcal{Q}$ and $\overline{q} := \overline{\pi}(q) \in \overline{\mathcal{Q}}$ the restriction of the tangent map $T_q\overline{\pi} \colon T_q\mathcal{Q} \to T_{\overline{q}}\overline{\mathcal{Q}}$ to the horizontal subspace of $T_q\mathcal{Q}$, namely $\mathcal{H}_q$, is a linear isomorphism between $\mathcal{H}_q$ and $T_{\overline{q}}\overline{\mathcal{Q}}$. Therefore, for any $\overline{v}_{\overline{q}} \in T_{\overline{q}}\overline{\mathcal{Q}}$ it defines a horizontal lift map by

$$\mathrm{hl}_q(\overline{v}_{\overline{q}}) := \left(T_q\overline{\pi}|_{\mathcal{H}_q}\right)^{-1}(\overline{v}_{\overline{q}}). \tag{2.11}$$

The choice of the principal connection $\mathcal{A}$ is arbitrary; however, for a Hamiltonian mechanical system, we can use the Legendre transformation, which is induced by the kinetic energy metric K, to define an appropriate principal connection.

For any $q \in \mathcal{Q}$ consider the linear map $\mathbb{I}_q \colon Lie(\mathcal{G}) \to Lie^*(\mathcal{G})$, defined by

$$\mathbb{I}_q := \phi_q^* \circ \mathbb{F}L_q \circ \phi_q, \tag{2.12}$$

such that the following diagram commutes:

$$\begin{tikzcd}
Lie(\mathcal{G}) \arrow[r, "\phi_q"] \arrow[d, dashed, "\mathbb{I}_q"'] & T_q\mathcal{Q} \arrow[d, "\mathbb{F}L_q"] \\
Lie^*(\mathcal{G}) & T_q^*\mathcal{Q} \arrow[l, "\phi_q^*"]
\end{tikzcd}$$

This map is a linear isomorphism for any $q \in \mathcal{Q}$, and it is called the *locked inertia tensor*. For a Hamiltonian mechanical system with symmetry $\forall \xi, \eta \in Lie(\mathcal{G})$ we

have $\langle \mathbb{I}_q(\xi), \eta \rangle = K_q(\xi_{\mathcal{Q}}(q), \eta_{\mathcal{Q}}(q))$. The principal connection $\mathcal{A}$ can now be chosen to be the *mechanical connection* $\mathcal{A}^{Mech}$, which can be interpreted as the orthogonal projection with respect to the kinetic energy metric K, and defined by the following commuting diagram:

$$\begin{tikzcd}
T_q\mathcal{Q} \arrow[r, "\mathbb{F}L_q"] \arrow[d, dashed, "\mathcal{A}_q^{Mech}"'] & T_q^*\mathcal{Q} \arrow[d, "\mathbf{M}_q"] \\
Lie(\mathcal{G}) & Lie^*(\mathcal{G}) \arrow[l, "\mathbb{I}_q^{-1}"]
\end{tikzcd}$$

Therefore, $\forall q \in \mathcal{Q}$ we have

$$\mathcal{A}_q = \mathcal{A}_q^{Mech} := \mathbb{I}_q^{-1} \circ \mathbf{M}_q \circ \mathbb{F}L_q. \tag{2.13}$$

For any $\mu \in Lie^*(\mathcal{G})$, let the action of $\mathcal{G}$ restricted to the subgroup $\mathcal{G}_\mu = \{\mathfrak{g} \in \mathcal{G} | \operatorname{Ad}^*_{\mathfrak{g}}\mu = \mu\} \subseteq \mathcal{G}$ be denoted by $\Phi^\mu_{\mathfrak{h}} \colon \mathcal{Q} \to \mathcal{Q}$ ($\forall \mathfrak{h} \in \mathcal{G}_\mu$). Similarly, for this action we have a principal bundle $\widetilde{\pi} \colon \mathcal{Q} \to \widetilde{\mathcal{Q}} := \mathcal{Q}/\mathcal{G}_\mu$. Using the same procedure detailed above, the locked inertia tensor $\mathbb{I}^\mu_q \colon Lie(\mathcal{G}_\mu) \to Lie^*(\mathcal{G}_\mu)$ and the (mechanical) connection $\mathcal{A}^\mu_q \colon T_q\mathcal{Q} \to Lie(\mathcal{G}_\mu)$ ($\forall q \in \mathcal{Q}$) for the $\mathcal{G}_\mu$-action are defined by

$$\mathbb{I}^\mu_q := (\phi^\mu_q)^* \circ \mathbb{F}L_q \circ \phi^\mu_q, \tag{2.14}$$

and

$$\mathcal{A}^\mu_q := (\mathbb{I}^\mu_q)^{-1} \circ \mathbf{M}^\mu_q \circ \mathbb{F}L_q, \tag{2.15}$$

respectively. Here, the map $\phi^\mu_q \colon Lie(\mathcal{G}_\mu) \to T\mathcal{Q}$ corresponds to the infinitesimal $\mathcal{G}_\mu$-action, and $\mathbf{M}^\mu \colon T^*\mathcal{Q} \to Lie^*(\mathcal{G}_\mu)$ is the Ad^*-equivariant momentum map for the cotangent lifted $\mathcal{G}_\mu$-action, which are defined based on (2.3) and (2.5). Let the map $i^\mu \colon \mathcal{G}_\mu \hookrightarrow \mathcal{G}$ be the canonical inclusion map. Denote the induced map in the Lie algebras by $i^\mu_* \colon Lie(\mathcal{G}_\mu) \hookrightarrow Lie(\mathcal{G})$ and in the dual of the Lie algebras by $(i^\mu)^* \colon Lie^*(\mathcal{G}) \to Lie^*(\mathcal{G}_\mu)$. The following diagrams commute:

$$\begin{tikzcd}
Lie(\mathcal{G}) \arrow[dr, "\phi_q"] & \\
Lie(\mathcal{G}_\mu) \arrow[u, hook, "i^\mu_*"] \arrow[r, "\phi^\mu_q"] & T_q\mathcal{Q}
\end{tikzcd}
\qquad
\begin{tikzcd}
Lie^*(\mathcal{G}) \arrow[d, "(i^\mu)^*"'] & \\
Lie^*(\mathcal{G}_\mu) & T_q^*\mathcal{Q} \arrow[l, "(\phi^\mu_q)^*"] \arrow[ul, "\phi^*_q"']
\end{tikzcd}$$

Based on these commuting diagrams, we have the following relations:

$$\begin{aligned}
&\mathbb{I}^\mu_q = (i^\mu)^* \circ \phi^*_q \circ \mathbb{F}L_q \circ \phi_q \circ i^\mu_* = (i^\mu)^* \circ \mathbb{I}_q \circ i^\mu_*, \\
&\mathbf{M}^\mu_q = (i^\mu)^* \circ \mathbf{M}_q, \\
&\mathcal{A}^\mu_q = (\mathbb{I}^\mu_q)^{-1} \circ (i^\mu)^* \circ \mathbf{M}_q \circ \mathbb{F}L_q = (\mathbb{I}^\mu_q)^{-1} \circ (i^\mu)^* \circ \mathbb{I}_q \circ \mathcal{A}_q.
\end{aligned}$$

For the principal bundle $\widetilde{\pi}\colon \mathcal{Q} \to \widetilde{\mathcal{Q}}$ with the principal connection $\mathcal{A}^\mu$, the horizontal and vertical sub-bundles are $\mathcal{H}^\mu := \ker(\mathcal{A}^\mu)$ and $\mathcal{V}^\mu := \ker(\widetilde{\pi}) = \{\eta_{\mathcal{Q}} = \phi^\mu(\eta) |\, \eta \in Lie(\mathcal{G}_\mu)\}$, respectively. It is easy to check that $\mathcal{V}^\mu \subseteq \mathcal{V}$ and $\mathcal{H} \subseteq \mathcal{H}^\mu$ as vector sub-bundles. The horizontal lift map corresponding to the connection $\mathcal{A}^\mu$ can be defined as

$$\widetilde{\mathrm{hl}}_q(\widetilde{v}_{\widetilde{q}}) := (T_q\widetilde{\pi}|_{\mathcal{H}^\mu_q})^{-1}(\widetilde{v}_{\widetilde{q}}),$$

where $\widetilde{q} := \widetilde{\pi}(q)$ and $\widetilde{v}_{\widetilde{q}} \in T_{\widetilde{q}}\widetilde{\mathcal{Q}}$.

Now, consider the 1-form $\alpha_\mu := \mathcal{A}^*\mu \in \Omega^1(\mathcal{Q})$.

Lemma 25. *The 1-form α_μ takes values in $\boldsymbol{M}^{-1}(\mu)$, and it is invariant under $\mathcal{G}_\mu$-action.*

Proof. Using the definition of the momentum map and principal connection, we have $\forall \xi \in Lie(\mathcal{G})$

$$\langle \mathbf{M}(\alpha_\mu), \xi\rangle = \langle \alpha_\mu, \xi_{\mathcal{Q}}\rangle = \langle \mathcal{A}^*_q\mu, \phi_q(\xi)\rangle = \langle \mu, (\mathcal{A}_q \circ \phi_q)(\xi)\rangle = \langle \mu, \xi\rangle.$$

As the result, $\alpha_\mu \in \mathbf{M}^{-1}(\mu)$.

Finally, consider the action of an arbitrary element $\mathfrak{h} \in \mathcal{G}_\mu$, and denote the action simply by $\mathfrak{h}\cdot q := \Phi_{\mathfrak{h}}(q)$ and $\mathfrak{h}\cdot v_q := T\Phi_{\mathfrak{h}}(v_q)$. Based on the Ad^*-equivariance of $\mathcal{A}$ and the definition of $\mathcal{G}_\mu$, one can show that α_μ is $\mathcal{G}_\mu$ invariant. For all $v_q \in T_q\mathcal{Q}$,

$$\begin{aligned}\langle \alpha_\mu(\mathfrak{h}\cdot q), \mathfrak{h}\cdot v_q\rangle &= \langle \mathcal{A}^*_{\mathfrak{h}\cdot q}\mu, \mathfrak{h}\cdot v_q\rangle = \langle \mu, \mathcal{A}_{\mathfrak{h}\cdot q}(\mathfrak{h}\cdot v_q)\rangle \\ &= \langle \mu, \mathrm{Ad}_{\mathfrak{h}^{-1}}\mathcal{A}_q(v_q)\rangle = \langle \mathrm{Ad}^*_{\mathfrak{h}^{-1}}\mu, \mathcal{A}_q(v_q)\rangle = \langle \mu, \mathcal{A}_q(v_q)\rangle.\end{aligned}$$

□

According to the Cartan Structure Equation [1] $\forall Z, Y \in \mathfrak{X}(\mathcal{Q})$ the exterior derivative of α_μ evaluated on Y and Z is equal to

$$d\alpha_\mu(Z, Y) = \langle \mu, d\mathcal{A}(Z, Y)\rangle = \langle \mu, \mathcal{B}(Z, Y) + [\mathcal{A}(Z), \mathcal{A}(Y)]\rangle, \tag{2.16}$$

where $\mathcal{B}_q(Z_q, Y_q) := (d\mathcal{A})_q(\mathrm{hor}_q(Z_q), \mathrm{hor}_q(Y_q)) = -\mathcal{A}_q([\mathrm{hor}(Z), \mathrm{hor}(Y)]_q)$ is the curvature of the connection $\mathcal{A}$, and $[\cdot,\cdot]$ in (2.16) corresponds to the Lie bracket in $Lie(\mathcal{G})$.

Lemma 26. *For all $\eta \in Lie(\mathcal{G}_\mu)$, the interior product of the 2-form $d\alpha_\mu$ with $\eta_{\mathcal{Q}}$ is zero, i.e., $\iota_{\eta_{\mathcal{Q}}} d\alpha_\mu = 0$.*

Proof.

$$\iota_{\eta_{\mathcal{Q}}} d\alpha_\mu = \mathcal{L}_{\eta_{\mathcal{Q}}}(\alpha_\mu) - d(\iota_{\eta_{\mathcal{Q}}}\alpha_\mu).$$

The Lie derivative term is zero since α_μ is invariant under the $\mathcal{G}_\mu$-action (see Lemma 25), and the exterior derivative term is zero since

$$\iota_{\eta_{\mathcal{Q}}}\alpha_\mu = \langle \alpha_\mu, \eta_{\mathcal{Q}}\rangle = \langle \mu, \mathcal{A}\circ\phi^\mu(\eta)\rangle = \langle \mu, \eta\rangle$$

is a constant function on $\mathcal{Q}$, since $\mathcal{A}\circ\phi^\mu(\eta) = \eta$, for all $\eta \in Lie(\mathcal{G}_\mu)$. □

By this lemma and Lemma 25 the 2-form $d\alpha_\mu$ is basic; hence, a closed 2-form $\beta_\mu \in \Omega^2(\widetilde{\mathcal{Q}})$ can be uniquely defined by the relation $T^*\widetilde{\pi}(\beta_\mu) = d\alpha_\mu$, and its pullback Ξ_μ by the cotangent bundle projection $\pi_{\widetilde{\mathcal{Q}}}\colon T^*\widetilde{\mathcal{Q}} \to \widetilde{\mathcal{Q}}$ will be a closed 2-form on $T^*\widetilde{\mathcal{Q}}$,

$$\Xi_\mu := T^*\pi_{\widetilde{\mathcal{Q}}}(\beta_\mu).$$

Theorem 27. *There is a symplectic embedding $\varphi_\mu : ((T^*\mathcal{Q})_\mu, \Omega_\mu) \hookrightarrow (T^*\widetilde{\mathcal{Q}}, \widetilde{\Omega}_{can} - \Xi_\mu)$ onto $[T\widetilde{\pi}(\mathcal{V})]^0 \subset T^*\widetilde{\mathcal{Q}}$ that covers the base $\widetilde{\mathcal{Q}}$, where $\widetilde{\Omega}_{can}$ is the canonical 2-form on $T^*\widetilde{\mathcal{Q}}$ and ^{0} indicates the annihilator with respect to the natural pairing between tangent and cotangent bundle. The map φ_μ is identified by*

$$\langle \varphi_\mu([\gamma_q]_\mu), T_q\widetilde{\pi}(v_q)\rangle = \langle \gamma_q - \alpha_\mu(q), v_q\rangle, \tag{2.17}$$

$\forall \gamma_q \in \boldsymbol{M}_q^{-1}(\mu)$ and $\forall v_q \in T_q\mathcal{Q}$, where $[\cdot]_\mu$ refers to a class of elements in the quotient manifold $\boldsymbol{M}^{-1}(\mu)/\mathcal{G}_\mu$ [17].

Based on the above theorem, the inverse of the map φ_μ exists only on $[T\widetilde{\pi}(\mathcal{V})]^0 \subset T^*\widetilde{\mathcal{Q}}$, and it is a diffeomorphism on this vector sub-bundle. Hence, one may rewrite the reduced Hamilton's equation (2.9) in $[T\widetilde{\pi}(\mathcal{V})]^0 \subset T^*\widetilde{\mathcal{Q}}$ as

$$\iota_{\widetilde{X}}(\widetilde{\Omega}_{can} - \Xi_\mu) = d\widetilde{H}, \tag{2.18}$$

where $\widetilde{H} := H_\mu \circ \varphi_\mu^{-1}$ for $\varphi_\mu^{-1}\colon [T\widetilde{\pi}(\mathcal{V})]^0 \to (T^*\mathcal{Q})_\mu$ being the inverse of φ_μ, $\widetilde{X} \circ \varphi_\mu = T\varphi_\mu \circ X_\mu$, and Ξ_μ can be calculated as follows. Consider two vector fields $\mathcal{Z}, \mathcal{Y} \in \mathfrak{X}(T^*\widetilde{\mathcal{Q}})$, denote an element of $\widetilde{\mathcal{Q}}$ by $\widetilde{q} := \widetilde{\pi}(q)$, and $\forall \widetilde{\alpha}_{\widetilde{q}} \in T^*\widetilde{\mathcal{Q}}$ define $Z_{\widetilde{q}} := T\pi_{\widetilde{\mathcal{Q}}}\mathcal{Z}(\widetilde{\alpha}_{\widetilde{q}})$, $Y_{\widetilde{q}} := T\pi_{\widetilde{\mathcal{Q}}}\mathcal{Y}(\widetilde{\alpha}_{\widetilde{q}})$:

$$\begin{aligned}(\Xi_\mu)_{\widetilde{\alpha}_{\widetilde{q}}}&(\mathcal{Z}(\widetilde{\alpha}_{\widetilde{q}}), \mathcal{Y}(\widetilde{\alpha}_{\widetilde{q}}))\\ &= \left\langle \mu, -\mathcal{A}_q([\mathrm{hor}(\widetilde{\mathrm{hl}}(Z)), \mathrm{hor}(\widetilde{\mathrm{hl}}(Y))]_q) + [\mathcal{A}_q(\widetilde{\mathrm{hl}}_q(Z_{\widetilde{q}})), \mathcal{A}_q(\widetilde{\mathrm{hl}}_q(Y_{\widetilde{q}}))]\right\rangle.\end{aligned} \tag{2.19}$$

If in Theorem 27 we assume $\mathcal{G}_\mu = \mathcal{G}$, whose special examples are when $\mathcal{G}$ is Abelian or $\mu = 0$, then the map φ_μ becomes a symplectomorphism. Under this assumption, since $\mathrm{hl} = \widetilde{\mathrm{hl}}$ and $\mathcal{A} \circ \mathrm{hl} = 0$, Ξ_μ can be calculated by a simpler formulation

$$(\Xi_\mu)_{\widetilde{\alpha}_{\widetilde{q}}}(\mathcal{Z}(\widetilde{\alpha}_{\widetilde{q}}), \mathcal{Y}(\widetilde{\alpha}_{\widetilde{q}})) = \left\langle \mu, -\mathcal{A}_q([\widetilde{\mathrm{hl}}(Z), \widetilde{\mathrm{hl}}(Y)]_q)\right\rangle. \tag{2.20}$$

3 Kinematics of Open-chain Multi-body Systems

3.1 Rigid Body and Observer

A 3-dimensional physical space can be modelled mathematically by a 3-dimensional *affine space*, which is equipped with a vector space. A rigid body is the closure of a bounded open subset of the affine space. This paper considers $N+1$ interconnected rigid bodies B_i's ($i = 0, \cdots, N$), each of which is a subset of an affine space A_i. We assume that A_0 corresponds to an inertial observer. Considering two rigid bodies, namely B_i and B_j, a relative pose of B_i with respect to B_j,

namely r_i^j, can be defined by an isometry between A_i and A_j with respect to the Euclidean metric, i.e., $r_i^j \colon A_i \to A_j$. The collection of all relative poses forms a smooth manifold, denoted by P_i^j, which is diffeomorphic to the Lie group $SE(3)$. When $i = j$ this manifold admits a group structure, and it becomes isomorphic to $SE(3)$, as a group. The elements of P_i^i correspond to the possible coordinate transformations of A_i. To simplify the notation, when $i = j$ only the lower index is used, e.g., $P_i := P_i^i$. The identity element and the Lie algebra of P_i are denoted by e_i and $Lie(P_i)$, respectively. A *relative motion* of B_i with respect to B_j is a smooth curve $t \mapsto r_i^j(t) \in P_i^j$, and the *relative velocity* at time t is the vector $v_i^j(t) = (dr_i^j/dt)(t) \in T_{r_i^j(t)} P_i^j$.

3.2 Joints

Given two rigid bodies B_i and B_j, a *joint* is a mechanism that restricts the relative motion of B_i with respect to B_j, and specifies a subset D_i^j of TP_i^j. A joint can be time dependant, called *rheonomic*, or time independent, called *scleronomic* [33]. A special type of scleronomic joints, which is mostly considered in the literature, is when we have $D_i^j \subseteq TP_i^j$ being a distribution on P_i^j that corresponds to admissible directions of the relative velocity of B_i with respect to B_j. We only consider this category of joints in this paper. We also assume in this paper that the distribution D_i^j is non-singular. If D_i^j is involutive, i.e. closed under the Lie bracket of vector fields, the joint is called *holonomic*; otherwise, it is a *nonholonomic* joint. Based on the global Frobenius Theorem [15], for a holonomic joint D_i^j identifies a foliation of submanifolds of P_i^j. The leaf $Q_i^j \subseteq P_i^j$ that contains the initial relative pose of B_i with respect to B_j, $r_{i,0}^j$, is called the *relative configuration manifold*. The manifold Q_i^j is the space of all admissible relative poses of B_i with respect to B_j considering the joint constraints. The dimension of Q_i^j is called the *number of degrees of freedom (d.o.f.)* of a joint. We then define $Q_i \subseteq P_i$ and $Q_j \subseteq P_j$ by the left and right composition of Q_i^j by the element $r_{j,0}^i \in Q_j^i$, where $r_{j,0}^i \circ r_{i,0}^j = e_i$ and $r_{i,0}^j \circ r_{j,0}^i = e_j$, i.e., $Q_i = L_{r_{j,0}^i}(Q_i^j)$ and $Q_j = R_{r_{j,0}^i}(Q_i^j)$. These submanifolds contain the identity element of P_i and P_j that correspond to the initial relative pose of B_i with respect to B_j, i.e., $r_{i,0}^j \in Q_i^j$.

3.2.1 Holonomic displacement subgroups

For a holonomic joint, we consider the left composed distribution $D_i := T_{r_i^j} L_{r_j^i(0)}(D_i^j) \subseteq TP_i$, which is involutive on P_i, and its integral manifold containing e_i is $Q_i \subseteq P_i$. The Lie bracket on the Lie algebra $Lie(P_i)$ is defined by the Lie bracket of left-invariant vector fields on P_i [14]. Therefore, if D_i is left-invariant, i.e., $D_i(r_i) = T_{e_i} L_{r_i}(D_i(e_i)), \forall r_i \in P_i$, involutivity of D_i coincides with the closedness of the Lie bracket on $D_i(e_i)$ as a linear subspace of $Lie(P_i)$, and $T_{e_i} Q_i = D_i(e_i)$ becomes a Lie sub-algebra of $Lie(P_i)$. As the result, the integral manifold of D_i, denoted by Q_i, is a unique d_i-dimensional connected Lie subgroup of P_i with the Lie algebra $Lie(Q_i) = D_i(e_i)$ [7].

Definition 31. A holonomic joint is called *displacement subgroup* if the corresponding distribution D_i (defined above) on P_i is left-invariant. That is, Q_i, which

Table 1 Categories of displacement subgroups

Dim.	Subgroups of $SE(3)$/displacement subgroups			
6	$SE(3) = SO(3) \ltimes \mathbb{R}^3$ free[a]			
4	$SE(2) \times \mathbb{R}$ planar+prismatic[b]			
3	$SE(2) = SO(2) \ltimes \mathbb{R}^2$ planar	$SO(3)$ ball (spherical)	$\mathbb{R}^3$ 3-d.o.f. prismatic	$H_p \ltimes \mathbb{R}^2$ 2-d.o.f. prismatic + helical[c]
2	$SO(2) \times \mathbb{R}$ cylindrical[d]	$\mathbb{R}^2$ 2-d.o.f. prismatic		
1	$SO(2)$ revolute	$\mathbb{R}$ prismatic	H_p helical	
0	$\{e\}$ fixed[a]			

[a] These two subgroups are the trivial subgroups of $SE(3)$.
[b] The axis of the prismatic joint is always perpendicular to the plane of the planar joint.
[c] The axis of the helical joint is always perpendicular to the plane of the 2-d.o.f. prismatic joint.
[d] The axis of the revolute and prismatic joints are always aligned.

is diffeomorphic to the relative configuration manifold Q_i^j, is a connected Lie subgroup of P_i.

We identify different types of displacement subgroups by the connected Lie subgroups of $SE(3)$, up to conjugation, which are tabulated in Table 1 [7]. From this table, we can observe that the displacement subgroups consist of the six *lower kinematic pairs*, i.e., revolute, prismatic, helical, cylindrical, planar and spherical joints, and combinations of them. There also exist other types of holonomic joints, e.g., universal joint and higher kinematic pairs, which are not included in the category of displacement subgroups.

In this paper, we consider multi-body systems with multi-d.o.f. displacement subgroups, or joints whose relative configuration manifolds are diffeomorphic to the (group) multiplication of subgroups of $SE(3)$. That is, $Q_i^j \cong Q_i = \{\, y_1 \cdots y_{n_i} \,|\, y_k \in Y_k \subset SE(3), k = 1, \cdots, n_i\} \cong Y_1 \times \cdots \times Y_{n_i}$, where Y_k is a Lie subgroup of $SE(3)$. Examples of this type of joints are the universal joint and ball bearing joint (without considering the nonholonomic constraints). The relative configuration manifold of the universal joint is diffeomorphic to the (group) multiplication of two rotations ($SO(2)$) about two perpendicular axes. And the configuration manifold of the ball bearing joint is diffeomorphic to the (group) multiplication of $\mathbb{R}^2$ and $SO(3)$. From here on, by holonomic joint we mean a holonomic joint that satisfies the above assumptions.

3.3 Open-chain Multi-body Systems

Let $B_0, \cdots, B_N$ be $N+1$ rigid bodies and $J_1, \cdots, J_N$ be N holonomic joints, which fall in the category of the joints described in the previous section.

Definition 32. A *holonomic open-chain multi-body system* $MS(N)$ is the collection of $N+1$ bodies connecting to each other with N holonomic joints, such that

there exists a unique path between any two bodies of the multi-body system. In an open-chain multi-body system, bodies with only one neighbouring body are called *extremities*.

We can label the bodies in a $MS(N)$ starting from the inertial coordinate frame (ground), B_0, outwards. That is, we label the bodies connected to B_0 by joints successively as $B_1, \cdots, B_{N_0}$ ($N_0 \leq N$), and we repeat the same procedure for all N_0 bodies starting from B_1, e.g., all of the bodies connected to B_1 by joints are labelled as $B_{N_0+1}, \cdots, B_{N_0+N_1}$ and so on. Thus, we have $\sum_{l=0} N_l = N$. We number the joints in a $MS(N)$ using the bigger body label, e.g., we label the joint between B_i and B_j, where $i > j$, as J_i. Considering the bodies and joints in an open-chain multi-body system as vertices and edges of a graph, respectively, we can encode the topology of the system in an $N \times (N+1)$ matrix. We label this matrix by GM. The N rows of this matrix correspond to the joints, $J_1, \cdots, J_N$, and the columns represent the bodies, $B_0, \cdots, B_N$. Row i of this matrix consists of only two non-zero elements corresponding to the two bodies that J_i connects. With the choice of numbering that was explained above, we define GM as

$$GM_{ij} = \begin{cases} -1 \text{ if } J_i \text{ connects } B_{j-1} \text{ to } B_i \\ 1 \qquad\qquad \text{if } i = j-1 \\ 0 \qquad\qquad \text{otherwise} \end{cases}.$$

We have the following properties of the matrix GM.

Corollary 31. *Let GM_j denote the jth column of the matrix GM.*

i) The summation of the columns of the matrix GM is equal to zero, i.e.,

$$\sum_{j=1}^{N+1} GM_j = \begin{array}{c} J_1 \\ \vdots \\ J_N \end{array} \begin{bmatrix} 0 \\ \vdots \\ 0 \end{bmatrix}.$$

ii) The summation of the rows corresponding to the edges (joints) that connect the vertex (body) B_j to B_i for $i > j$, has the following form

$$\begin{array}{c} \begin{array}{ccccccccccc} B_0 & \cdots & B_{j-1} & B_j & B_{j+1} & \cdots & B_{i-1} & B_i & B_{i+1} & \cdots & B_N \end{array} \\ \begin{bmatrix} 0 & \cdots & 0 & -1 & 0 & \cdots & 0 & 1 & 0 & \cdots & 0 \end{bmatrix}. \end{array}$$

Denote the transpose of GM by GM^T. For all $i, j = 1, \cdots, (N+1)$

iii) $((GM)^T(GM))_{ii}$= the number of neighbouring vortices (bodies) connected to B_{i-1}.

iv) if $((GM)^T(GM))_{ij} = -1$ for $i \neq j$, then the vortex (body) B_{i-1} is connected to B_{j-1}, either with the edge (joint) J_{i-1} if $i > j$, or with the edge (joint) J_{j-1} if $j > i$.

Note that, for any $i = 2, \cdots, (N+1)$, if $((GM)^T(GM))_{ii} = 1$ then the body B_{i-1} is an extremity. The body corresponding to the kth 1 is called the kth extremity. Accordingly, the path between B_0 and the kth extremity is called the kth *branch*.

Corollary 32. *Let the row matrix Ph_i represent the path between the vertex (body) B_i ($\forall i = 1, \cdots, N$) and B_0. The jth element of Ph_i is equal to 1 if the path crosses the edge (joint) J_j. Then we have*

$$Ph_i \times GM = \begin{array}{c} \begin{array}{cccccccc} B_0 & B_1 & \cdots & B_{i-1} & B_i & B_{i+1} & \cdots & B_N \end{array} \\ \begin{bmatrix} -1 & 0 & \cdots & 0 & 1 & 0 & \cdots & 0 \end{bmatrix} \end{array}.$$

Hence, the matrix of all paths, i.e.,

$$Ph = \begin{bmatrix} Ph_1 \\ \vdots \\ Ph_N \end{bmatrix}$$

is equal to $\overline{GM}^{-1}$, where $\overline{GM}$ is the matrix GM when the first column is removed.

For example, consider the following topology of an open-chain multi-body system

$$\begin{array}{ccccccc} B_0 & \overset{J_1}{\text{———}} & B_1 & \overset{J_3}{\text{———}} & B_3 & \overset{J_4}{\text{———}} & B_4 \\ & & \Big| \; J_2 & & & & \\ & & B_2 & & & & \end{array} \tag{3.21}$$

We have

$$GM = \begin{array}{c} \\ J_1 \\ J_2 \\ J_3 \\ J_4 \end{array} \begin{array}{c} \begin{array}{ccccc} B_0 & B_1 & B_2 & B_3 & B_4 \end{array} \\ \begin{bmatrix} -1 & 1 & 0 & 0 & 0 \\ 0 & -1 & 1 & 0 & 0 \\ 0 & -1 & 0 & 1 & 0 \\ 0 & 0 & 0 & -1 & 1 \end{bmatrix} \end{array},$$

$$Ph = \begin{array}{c} \\ Ph_1 \\ Ph_2 \\ Ph_3 \\ Ph_4 \end{array} \begin{array}{c} \begin{array}{cccc} J_1 & J_2 & J_3 & J_4 \end{array} \\ \begin{bmatrix} 1 & 0 & 0 & 0 \\ 1 & 1 & 0 & 0 \\ 1 & 0 & 1 & 0 \\ 1 & 0 & 1 & 1 \end{bmatrix} \end{array}.$$

Since only displacement subgroups and their combinations are considered, the relative configuration manifold corresponding to the joint J_i is diffeomorphic to the Lie group $\mathcal{Q}_i := L_{r^0_{i,0}} R_{r^i_{0,0}} Q_i$, where $Q_i \cong Y_1 \times \cdots \times Y_{n_i}$ is defined in Section 3.2 and $r^0_{i,0} \in P^0_i$ is the initial pose of B_i with respect to B_0, for $i = 1, ..., N$. Note that, every $\mathcal{Q}_i$ is a d_i dimensional Lie subgroup of $\overbrace{P_0 \times \cdots \times P_0}^{n_i - times} \cong \overbrace{SE(3) \times \cdots \times SE(3)}^{n_i - times}$, where d_i is the number of degrees of freedom of J_i, and $D := \sum_{i=1}^{N} d_i$ is the total number of degrees of freedom of the holonomic open-chain multi-body system. Any state of a $MS(N)$ can be realized by $q := (q_1, \cdots, q_N) \in \mathcal{Q} := \mathcal{Q}_1 \times \cdots \times \mathcal{Q}_N$, where $\mathcal{Q}$ is the configuration manifold. The manifold $\mathcal{Q}$ along with the group structure induced by $\mathcal{Q}_i$'s is also a Lie group. Let $r_{cm,i} \in SE(3)$ be the initial pose of the centre of mass of B_i with respect to the inertial coordinate frame. Now, we define the map $F \colon \mathcal{Q} \to SE(3) \times \cdots \times SE(3) =: \mathcal{P}$ by

$$F(q) := (q_1 r_{cm,1}, q_1 q_2 r_{cm,2}, \cdots, q_1 \cdots q_N r_{cm,N}). \tag{3.22}$$

Here, if the joint J_i is a combination of displacement subgroups, by q_i we mean the multiplication of the elements of the subgroups of $SE(3)$, i.e., Y_i's. This map determines the pose of the centre of mass of all bodies with respect to the inertial coordinate frame. Note that, the ith component of this map consists of the joint parameters of all joints that connect B_0 to B_i in the open-chain multi-body system.

For any motion of the open-chain multi-body system, i.e., a curve $t \mapsto q(t) \in \mathcal{Q}$, the velocity of the centre of mass of the bodies with respect to the inertial coordinate frame (absolute velocity) is calculated by $\dot{\mathfrak{p}} := \frac{d}{dt}F(q(t)) = T_qF(\dot{q}) \in T_{F(q(t))}\mathcal{P}$. Based on Corollary 32, we can explicitly write the tangent map T_qF using the matrix Ph. First, we substitute the zero elements in the matrix Ph by 6×6 block matrices of zero. Then, $\forall i = 1, \cdots, N$ we substitute all of the elements in Ph_i that are equal to 1 by the linear maps in the following form:

$$T(R_{r_{cm,i}})T(R_{\prod_r q_r})T(L_{\prod_l q_l}),$$

where the maps $L_\bullet \colon SE(3) \to SE(3)$ and $R_\bullet \colon SE(3) \to SE(3)$ are the left and right translation maps on $SE(3)$, respectively. Here, $\prod_l q_l$ and $\prod_r q_r$ are the product of some elements of the relative configuration manifolds $\mathcal{Q}_i \subseteq P_0 \cong SE(3)$, considered as elements of $SE(3)$. In order to specify which joints contribute to the left or right translation maps, in Ph_i we look at the 1s that are on the left or right of the corresponding element, respectively. If there does not exist any element equal to 1 on left (right), then we put the argument of the left (right) translation map equal to the identity element of $SE(3)$. Finally, T_qF is the right multiplication of the resulting matrix by

$$T_q\iota := T_{q_1}\iota_1 \oplus \cdots \oplus T_{q_N}\iota_N = \begin{bmatrix} T_{q_1}\iota_1 & \cdots & 0 \\ \vdots & \ddots & \vdots \\ 0 & \cdots & T_{q_N}\iota_N \end{bmatrix},$$

where for all $i = 1, \cdots, N$, $\iota_i \colon \mathcal{Q}_i \to SE(3)$ is the canonical inclusion map and $T\iota_i \colon T\mathcal{Q}_i \to TSE(3)$ is the induced map on the tangent bundles.

This simple procedure becomes clear in an example. Consider the topology of the system in (3.21), we have

$$T_qF = \begin{bmatrix} TR_{r_{cm,1}} & 0_{6\times6} & 0_{6\times6} & 0_{6\times6} \\ TR_{r_{cm,2}}TR_{q_2} & TR_{r_{cm,2}}TL_{q_1} & 0_{6\times6} & 0_{6\times6} \\ TR_{r_{cm,3}}TR_{q_3} & 0_{6\times6} & TR_{r_{cm,3}}TL_{q_1} & 0_{6\times6} \\ TR_{r_{cm,4}}TR_{q_3q_4} & 0_{6\times6} & TR_{r_{cm,4}}TR_{q_4}TL_{q_1} & TR_{r_{cm,4}}TL_{q_1q_3} \end{bmatrix} T_q\iota.$$

4 Lagrangian and Hamiltonian of an Open-chain Multi-body System

As mentioned in Section 2, the Lagrangian of an Open-chain Multi-body System $L \colon T\mathcal{Q} \to \mathbb{R}$ is $L(v_q) = \frac{1}{2}K_q(v_q, v_q) - V(q)$. In this section, we describe how the Lagrangian L and subsequently the Hamiltonian H of an open-chain multi-body system is calculated.

Let h_i for $i = 1, \cdots, N$ be the left-invariant kinetic energy metric for the rigid body B_i in the open-chain multi-body system. They induce the metric $h :=$

$h_1 \oplus \cdots \oplus h_N$ on $\mathcal{P}$, which is left-invariant. The kinetic energy metric of an open-chain multi-body system is defined by $K := T^*F(h)$, where $T^*F(h)$ is the pull back of the metric h by the map F. That is, $\forall q \in \mathcal{Q}$ and $\forall v_q, w_q \in T_q\mathcal{Q}$ we have

$$\begin{aligned} K_q(v_q, w_q) &= h_{F(q)}\left(T_qF(v_q), T_qF(w_q)\right) \\ &= h_{\mathfrak{e}}\left(T_{F(q)}L_{F(q)^{-1}}(T_qF(v_q)), T_{F(q)}L_{F(q)^{-1}}(T_qF(w_q))\right), \end{aligned} \tag{4.23}$$

where $\mathfrak{e}$ is the identity element of the Lie group $\mathcal{P}$ and $L_{\mathfrak{p}}$ is the left translation map by an element $\mathfrak{p} \in \mathcal{P}$. Furthermore, we can simplify the above expression by calculating the following linear map for multi-body systems:

$$\begin{aligned} &T_{F(q)}L_{F(q)^{-1}}(T_qF) \\ &\quad= \left(\mathrm{Ad}_{r_{cm,1}^{-1}} \oplus \cdots \oplus \mathrm{Ad}_{r_{cm,N}^{-1}}\right) \mathcal{J}_q \left(T_{q_1}(L_{q_1^{-1}} \circ \iota_1) \oplus \cdots \oplus T_{q_N}(L_{q_N^{-1}} \circ \iota_N)\right) \\ &\quad= \begin{bmatrix} \mathrm{Ad}_{r_{cm,1}^{-1}} & \cdots & 0 \\ \vdots & \ddots & \vdots \\ 0 & \cdots & \mathrm{Ad}_{r_{cm,N}^{-1}} \end{bmatrix} \mathcal{J}_q \begin{bmatrix} T_{q_1}(L_{q_1^{-1}} \circ \iota_1) & \cdots & 0 \\ \vdots & \ddots & \vdots \\ 0 & \cdots & T_{q_N}(L_{q_N^{-1}} \circ \iota_N) \end{bmatrix}, \end{aligned}$$

where $\mathcal{J}_q \colon Lie(\mathcal{P}) \to Lie(\mathcal{P})$ is the linear map that is calculated in the following, similar to T_qF in the previous section. In the matrix Ph, we start with substituting the zero elements by 6×6 block matrices of zero. Then, $\forall i = 1, \cdots, N$ we substitute all of the elements in Ph_i that are equal to 1 by the linear maps in the form of $\mathrm{Ad}_{(\prod_r q_r)^{-1}}$. The map $\mathcal{J}_q$ for the example (3.21) can be calculated as

$$\mathcal{J}_q = \begin{bmatrix} id_6 & 0_{6\times6} & 0_{6\times6} & 0_{6\times6} \\ \mathrm{Ad}_{q_2^{-1}} & id_6 & 0_{6\times6} & 0_{6\times6} \\ \mathrm{Ad}_{q_3^{-1}} & 0_{6\times6} & id_6 & 0_{6\times6} \\ \mathrm{Ad}_{(q_3q_4)^{-1}} & 0_{6\times6} & \mathrm{Ad}_{q_4^{-1}} & id_6 \end{bmatrix}.$$

In this paper, wherever we consider a non-zero potential energy function it is induced by a constant gravitational field g in A_0, which is defined in Section 3.2 as the 3-dimensional affine space corresponding to the inertial coordinate frame. Using the Euclidean inner product of $\mathbb{R}^3$, which is denoted by $\ll \cdot, \cdot \gg$, the potential energy function for an open-chain multi-body system is defined as

$$V(q) := \sum_{i=1}^{N} \ll m_i g, O_0 - F_i(q)(O_i) \gg, \tag{4.24}$$

where m_i is the mass of the rigid body B_i, and $F_i(q) \colon A_i \to A_0$ is the ith component of the map F that is considered as an isometry between A_i and A_0. The points $O_0 \in A_0$ and $O_i \in A_i$ are the base points for the affine spaces A_0 and A_i, where O_i is located at the centre of mass of B_i.

Subsequently, using the Legendre transformation one can define the Hamiltonian $H \colon T^*\mathcal{Q} \to \mathbb{R}$ for an open-chain multi-body system by

$$H(p_q) := \langle p_q, \mathbb{F}L_q^{-1}(p_q)\rangle - L(\mathbb{F}L_q^{-1}(p_q)). \tag{4.25}$$

Here, we remind the reader that $\mathbb{F}L \colon T\mathcal{Q} \to T^*\mathcal{Q}$ is the fibre-wise invertible Legendre transformation induced by the kinetic energy metric, i.e., $\forall v_q, w_q \in T_q\mathcal{Q}$,

$\langle \mathbb{F}L_q(v_q), w_q\rangle = K_q(v_q, w_q)$. Accordingly, a holonomic open-chain multi-body system can be considered as a Hamiltonian mechanical system described by the four-tuple $(T^*\mathcal{Q}, \Omega_{can}, H, K)$. Here, the metric K and the Hamiltonian H are defined by (4.23) and (4.25), respectively.

5 Reduction of Holonomic Open-chain Multi-body Systems

Based on the definition of the kinetic energy metric K for a holonomic open-chain multi-body system, we immediately find the following symmetry for K.

Theorem 51. *For a holonomic open-chain multi-body system, the action of $\mathcal{G} = \mathcal{Q}_1$ on $\mathcal{Q}$ by left translation on the first component leaves the kinetic energy metric K invariant. For any $\mathfrak{g} \in \mathcal{G}$ we denote the action map by $\Phi_{\mathfrak{g}}\colon \mathcal{Q} \to \mathcal{Q}$ such that $\forall q = (q_1, \cdots, q_N) \in \mathcal{Q}$ we have $\Phi_{\mathfrak{g}}(q) = (\mathfrak{g}q_1, q_2, \cdots, q_N)$.*

Proof. For any $\mathfrak{g} \in \mathcal{G}$, let $T\Phi_{\mathfrak{g}}\colon T\mathcal{Q} \to T\mathcal{Q}$ be the induced action of $\mathcal{G}$ on the tangent bundle. For simplicity, $\forall q \in \mathcal{Q}$ and $\forall v_q \in T_q\mathcal{Q}$ we respectively write $\Phi_{\mathfrak{g}}(q)$ and $T_q\Phi_{\mathfrak{g}}(v_q)$ as $\mathfrak{g}\cdot q$ and $\mathfrak{g}\cdot v_q$. Then, $\forall w_q \in T_q\mathcal{Q}$ we have

$$
\begin{aligned}
&K_{\mathfrak{g}\cdot q}(\mathfrak{g}\cdot v_q, \mathfrak{g}\cdot w_q)\\
&\qquad = h_{\mathfrak{e}}\left((T_{F(\mathfrak{g}\cdot q)}L_{F(\mathfrak{g}\cdot q)^{-1}})(T_{\mathfrak{g}\cdot q}F)(\mathfrak{g}\cdot v_q), (T_{F(\mathfrak{g}\cdot q)}L_{F(\mathfrak{g}\cdot q)^{-1}})(T_{\mathfrak{g}\cdot q}F)(\mathfrak{g}\cdot w_q)\right)\\
&\quad = h_{\mathfrak{e}}\left((T_{F(\mathfrak{g}\cdot q)}L_{F(\mathfrak{g}\cdot q)^{-1}})(T_q(F\circ\Phi_{\mathfrak{g}}))(v_q), (T_{F(\mathfrak{g}\cdot q)}L_{F(\mathfrak{g}\cdot q)^{-1}})(T_q(F\circ\Phi_{\mathfrak{g}}))(w_q)\right)\\
&\quad = h_{\mathfrak{e}}\left((T_{F(\mathfrak{g}\cdot q)}L_{F(\mathfrak{g}\cdot q)^{-1}})(T_q(L_{(\mathfrak{g},\cdots,\mathfrak{g})}\circ F))(v_q)\right.\\
&\qquad\qquad \left., (T_{F(\mathfrak{g}\cdot q)}L_{F(\mathfrak{g}\cdot q)^{-1}})(T_q(L_{(\mathfrak{g},\cdots,\mathfrak{g})}\circ F))(w_q)\right)\\
&\quad = h_{\mathfrak{e}}\left((T_{(\mathfrak{g},\cdots,\mathfrak{g})F(q)}(L_{F(q)^{-1}}\circ L_{(\mathfrak{g},\cdots,\mathfrak{g})^{-1}}))(T_q(L_{(\mathfrak{g},\cdots,\mathfrak{g})}\circ F))(v_q)\right.\\
&\qquad\qquad \left., (T_{(\mathfrak{g},\cdots,\mathfrak{g})F(q)}(L_{F(q)^{-1}}\circ L_{(\mathfrak{g},\cdots,\mathfrak{g})^{-1}}))(T_q(L_{(\mathfrak{g},\cdots,\mathfrak{g})}\circ F))(w_q)\right)\\
&\quad = h_{\mathfrak{e}}\left(T_q(L_{F(q)^{-1}}\circ F)(v_q), T_q(L_{F(q)^{-1}}\circ F)(w_q)\right)\\
&\quad = h_{\mathfrak{e}}\left((T_{F(q)}L_{F(q)^{-1}})(T_qF)(v_q), (T_{F(q)}L_{F(q)^{-1}})(T_qF)(w_q)\right) = K_q(v_q, w_q).
\end{aligned}
$$

The first equality is based on the definition of the metric K, and the third and fourth equalities are true since the following diagram commutes.

$$
\begin{tikzcd}
\mathcal{Q} \arrow[r, "F"] \arrow[d, "\Phi_{\mathfrak{g}}"'] & \mathcal{P} \arrow[d, "L_{(\mathfrak{g},\cdots,\mathfrak{g})}"] \\
\mathcal{Q} \arrow[r, "F"] & \mathcal{P}
\end{tikzcd}
$$

□

For the special case of open-chain multi-body systems in space where the potential energy function is equal to zero, this theorem indicates that the Hamiltonian of the system is also invariant under the cotangent lifted action of $\mathcal{G}$. In general, there exist joints for which the potential energy function V defined by (4.24) is also invariant under the $\mathcal{G}$-action, e.g., if $\mathcal{Q}_1$ corresponds to a planar joint with

the direction of the gravitational field g being perpendicular to the plane of the joint. For such first joints, the Hamiltonian of the system H becomes invariant under the cotangent lifted action of $\mathcal{G}$. From here on, we always assume that V is also invariant under the $\mathcal{G}$-action, unless otherwise stated. Accordingly, the five-tuple $(T^*\mathcal{Q}, \Omega_{can}, H, K, \mathcal{G})$ with the group action defined in Theorem 51 is called a holonomic open-chain multi-body system with symmetry, which is a mechanical system with symmetry.

For a holonomic open-chain multi-body system with symmetry, the $\mathcal{G}$-action is basically the left translation on $\mathcal{Q}_1$. Therefore, the quotient manifolds $\overline{\mathcal{Q}} = \mathcal{Q}/\mathcal{G}$ and $\widetilde{\mathcal{Q}} = \mathcal{Q}/\mathcal{G}_\mu$ are equal to $(\mathcal{Q}_2 \times \cdots \times \mathcal{Q}_N)$ and $(\mathcal{Q}_1/\mathcal{G}_\mu \times \mathcal{Q}_2 \times \cdots \times \mathcal{Q}_N)$, respectively. We remind the reader that $\forall \mu \in Lie^*(\mathcal{G})$ the subgroup $\mathcal{G}_\mu \subseteq \mathcal{G}$ is the coadjoint isotropy group corresponding to $\mathcal{G}$. For any $q_1 \in \mathcal{Q}_1$, let $\widetilde{q}_1 \in \mathcal{Q}_1/\mathcal{G}_\mu$ denote the equivalence class corresponding to q_1. Indeed, $\forall q = (q_1, \cdots, q_N) \in \mathcal{Q}$ the quotient maps $\overline{\pi}\colon \mathcal{Q} \to \overline{\mathcal{Q}}$ and $\widetilde{\pi}\colon \mathcal{Q} \to \widetilde{\mathcal{Q}}$ are defined by $\overline{q} := \overline{\pi}(q) = (q_2, \cdots, q_N)$ and $\widetilde{q} := \widetilde{\pi}(q) = (\widetilde{q}_1, q_2, \cdots, q_N)$, respectively.

For an open-chain multi-body system with symmetry, we then calculate the infinitesimal action of $\xi \in Lie(\mathcal{G})$ on $\mathcal{Q}$ at $q = (q_1, ..., q_N)$ by

$$\xi_{\mathcal{Q}}(q) = \frac{\partial}{\partial \epsilon}\bigg|_{\epsilon=0} (\exp(\epsilon\xi)q_1, q_2, \cdots, q_N) = (\xi q_1, 0, \cdots, 0).$$

This relation indicates that the map ϕ is the right translation of a Lie algebra element on $\mathcal{Q}_1$, i.e.,

$$\phi_q := \begin{bmatrix} T_{e_1}R_{q_1} \\ 0 \\ \vdots \\ 0 \end{bmatrix}. \tag{5.26}$$

Accordingly, based on (2.5) $\forall p_q := (p_1, \cdots, p_N) \in T^*\mathcal{Q}$ the momentum map $\mathbf{M}\colon T^*\mathcal{Q} \to Lie^*(\mathcal{G})$ for a holonomic open-chain multi-body system can be determined by the following calculation,

$$\langle \mathbf{M}_q(p_q), \xi \rangle = \langle (p_1, \cdots, p_N), (\xi q_1, 0, \cdots, 0) \rangle = \langle p_1, \xi q_1 \rangle = \langle T^*_{e_1} R_{q_1} p_1, \xi \rangle.$$

As the result,

$$\mathbf{M}_q = \phi_q^* = \begin{bmatrix} T^*_{e_1} R_{q_1} & 0 & \cdots & 0 \end{bmatrix}. \tag{5.27}$$

Denote the block components of the kinetic energy tensor K, which is equal to the Legendre transformation in the case of Hamiltonian mechanical systems, by $K_{ij}(q) dq_i \otimes dq_j$ for $i, j = 1, \cdots, N$. Hence, we have $\mathbb{F}L_q = \sum_{i,j=1}^N K_{ij}(q) dq_i \otimes dq_j$ or equivalently

$$\mathbb{F}L_q = \begin{bmatrix} K_{11}(q) & \cdots & K_{1N}(q) \\ \vdots & \ddots & \vdots \\ K_{N1}(q) & \cdots & K_{NN}(q) \end{bmatrix}.$$

Lemma 52. *For all $q \in \mathcal{Q}$ we have the following equality:*

$$\mathbb{F}L_q = \begin{bmatrix} (T^*_{q_1} L_{q_1^{-1}})(\overline{K}_{11}(\overline{q}))(T_{q_1} L_{q_1^{-1}}) & (T^*_{q_1} L_{q_1^{-1}})(\overline{K}_{12}(\overline{q})) & \cdots & (T^*_{q_1} L_{q_1^{-1}})(\overline{K}_{1N}(\overline{q})) \\ (\overline{K}_{21}(\overline{q}))(T_{q_1} L_{q_1^{-1}}) & \overline{K}_{22}(\overline{q}) & \cdots & \overline{K}_{2N}(\overline{q}) \\ \vdots & \vdots & \ddots & \vdots \\ (\overline{K}_{N1}(\overline{q}))(T_{q_1} L_{q_1^{-1}}) & \overline{K}_{N2}(\overline{q}) & \cdots & \overline{K}_{NN}(\overline{q}) \end{bmatrix},$$

where $\overline{q} = \overline{\pi}(q)$ *and* $\overline{K}_{ij}(\overline{q}) = K_{ij}((e_1, \overline{q}))$.

Proof. By Theorem 51, $\forall v_q, w_q \in T_q\mathcal{Q}$ and $\overline{q} = \overline{\pi}(q) \in \overline{\mathcal{Q}}$ we have

$$K_q(v_q, w_q) = K_{(e_1,\overline{q})}(T_q\Phi_{q_1^{-1}} v_q, T_q\Phi_{q_1^{-1}} w_q).$$

By the definition of Legendre transformation in (2.1), we can rewrite this equation as

$$\begin{aligned}\langle \mathbb{F}L_q(v_q), w_q\rangle &= \left\langle \mathbb{F}L_{(e_1,\overline{q})}(T_q\Phi_{q_1^{-1}})(v_q), T_q\Phi_{q_1^{-1}}(w_q)\right\rangle \\ &= \left\langle (T_q^*\Phi_{q_1^{-1}})\mathbb{F}L_{(e_1,\overline{q})}(T_q\Phi_{q_1^{-1}})(v_q), w_q\right\rangle.\end{aligned}$$

We prove the equality in the lemma, since we have

$$T_q\Phi_{q_1^{-1}} = T_{q_1}L_{q_1^{-1}} \oplus id_{T_{\overline{q}}\overline{\mathcal{Q}}} = \begin{bmatrix} T_{q_1}L_{q_1^{-1}} & 0 \\ 0 & id_{T_{\overline{q}}\overline{\mathcal{Q}}}\end{bmatrix},$$

where $id_{T_{\overline{q}}\overline{\mathcal{Q}}}$ is the identity map on $T_{\overline{q}}\overline{\mathcal{Q}}$. □

Based on this lemma we calculate the locked inertia tensor $\mathbb{I}_q = \phi_q^* \circ \mathbb{F}L_q \circ \phi_q$ for a holonomic open-chain multi-body system by

$$\mathbb{I}_q = (T_{e_1}^* R_{q_1})K_{11}(q)(T_{e_1}R_{q_1}) = \mathrm{Ad}^*_{q_1^{-1}}\overline{K}_{11}(\overline{q})\mathrm{Ad}_{q_1^{-1}}. \tag{5.28}$$

Consequently, using (2.13) we determine the (mechanical) connection $\mathcal{A}$ corresponding to the $\mathcal{G}$-action, for a holonomic open-chain multi-body system:

$$\begin{aligned}\mathcal{A}_q &= \mathbb{I}_q^{-1} \circ \mathbf{M}_q \circ \mathbb{F}L_q \\ &= (\mathrm{Ad}_{q_1})\overline{K}_{11}(\overline{q})^{-1}(\mathrm{Ad}^*_{q_1})\begin{bmatrix} T_{e_1}^* R_{q_1} & 0 \cdots & 0\end{bmatrix}\begin{bmatrix} K_{11} & \cdots & K_{1N} \\ \vdots & \ddots & \vdots \\ K_{N1} & \cdots & K_{NN}\end{bmatrix} \\ &= \mathrm{Ad}_{q_1}\left[T_{q_1}L_{q_1^{-1}}\ \overline{K}_{11}(\overline{q})^{-1}\overline{K}_{12}(\overline{q}) \cdots\ \overline{K}_{11}(\overline{q})^{-1}\overline{K}_{1N}(\overline{q})\right] \\ &=: \mathrm{Ad}_{q_1}\left[T_{q_1}L_{q_1^{-1}}\ A_{\overline{q}}\right],\end{aligned} \tag{5.29}$$

where the last line of (5.29) is the consequence of Lemma 52, and the fibre-wise linear map $A\colon T\overline{\mathcal{Q}} \to Lie(\mathcal{G})$ is defined by the last equality.

According to (2.11), $\forall \overline{q} \in \overline{\mathcal{Q}}$ and $\forall \overline{v}_{\overline{q}} \in T_{\overline{q}}\overline{\mathcal{Q}}$ the horizontal lift map $\mathrm{hl}_q\colon T_{\overline{q}}\overline{\mathcal{Q}} \to T_q\mathcal{Q}$ becomes

$$\mathrm{hl}_q = \begin{bmatrix} -(T_{e_1}L_{q_1})A_{\overline{q}} \\ id_{T_{\overline{q}}\overline{\mathcal{Q}}}\end{bmatrix},$$

where $q = (q_1, \overline{q})$.

Using the decomposition $T\mathcal{Q} = \mathcal{H} \oplus \mathcal{V}$ introduced in the previous section, we then show that $\forall q \in \mathcal{Q}$ the map $\mathrm{hor}_q \colon T_q\mathcal{Q} \to \mathcal{H}_q$, which maps any vector in the tangent space $T_q\mathcal{Q}$ to its horizontal component, is

$$\begin{aligned}\mathrm{hor}_q = id_{T_q\mathcal{Q}} - \mathrm{ver}_q &= id_{T_q\mathcal{Q}} - \phi_q \circ \mathcal{A}_q \\ &= id_{T_q\mathcal{Q}} - \begin{bmatrix} T_{e_1}R_{q_1} \\ 0 \\ \vdots \\ 0 \end{bmatrix} \mathrm{Ad}_{q_1} \left[T_{q_1}L_{q_1^{-1}} \; A_{\overline{q}} \right] \\ &= \begin{bmatrix} 0 \cdots 0 & -T_{e_1}L_{q_1}A_{\overline{q}} \\ \vdots \quad \vdots & \\ 0 \cdots 0 & id_{T_{\overline{q}}\overline{\mathcal{Q}}} \end{bmatrix}. \end{aligned} \tag{5.30}$$

We consider the principal bundle $\widetilde{\pi}_1 \colon \mathcal{Q}_1 \to \mathcal{Q}_1/\mathcal{G}_\mu$ to locally trivialize the Lie group $\mathcal{Q}_1$. Let $U_\mu \subseteq \mathcal{Q}_1/\mathcal{G}_\mu$ be an open neighbourhood of $\widetilde{e}_1$, where $\widetilde{e}_1$ is the equivalence class corresponding to the identity element $e_1 \in \mathcal{Q}_1$. We denote the map corresponding to a local trivialization of the principal bundle $\widetilde{\pi}_1$ by $\widetilde{\chi} \colon \mathcal{G}_\mu \times U_\mu \to \mathcal{Q}_1$. This map can be defined by embedding U_μ in $\mathcal{Q}_1$, for example by using the exponential map of Lie groups. We denote this embedding by $\chi_\mu \colon U_\mu \hookrightarrow \mathcal{Q}_1$ such that $\forall \widetilde{q}_1 \in \mathcal{Q}_1/\mathcal{G}_\mu$ we have $\chi_\mu(\widetilde{q}_1) = \exp(\zeta)$ for some $\zeta \in \widetilde{\mathcal{C}}$, where $\widetilde{\mathcal{C}} \subset Lie(\mathcal{Q}_1)$ is a complementary subspace to $Lie(\mathcal{G}_\mu) \subset Lie(\mathcal{G})$. Accordingly, $\forall \mathfrak{h} \in \mathcal{G}_\mu$ we define the map $\widetilde{\chi}$ by the equality $\widetilde{\chi}((\mathfrak{h}, \widetilde{q}_1)) := \mathfrak{h}\chi_\mu(\widetilde{q}_1)$. It is easy to show that the map $\widetilde{\chi}$ is a diffeomorphism onto its image [11]. Using this diffeomorphism, any element $q_1 \in \widetilde{\pi}_1^{-1}(U_\mu) \subseteq \mathcal{Q}_1$ can be uniquely identified by an element $(\mathfrak{h}, \widetilde{q}_1) \in \mathcal{G}_\mu \times U_\mu$. As the result, we have $q = (q_1, \overline{q}) = (\widetilde{\chi}((\mathfrak{h}, \widetilde{q}_1)), \overline{q})$. Note that, from now on, for brevity we write $q = (\mathfrak{h}, \widetilde{q}_1, \overline{q})$. Accordingly, by Lemma 52, for all $q = (\mathfrak{h}, \widetilde{q}_1, \overline{q}) \in \mathcal{G}_\mu \times U_\mu \times \overline{\mathcal{Q}}$ we can calculate $\mathcal{A}^\mu$ as

$$\mathcal{A}^\mu_q = \mathrm{Ad}_{\mathfrak{h}} \left[T_{\mathfrak{h}}L_{\mathfrak{h}^{-1}} \; A^\mu_{\widetilde{q}} \right], \tag{5.31}$$

where $\widetilde{q} = \widetilde{\pi}(q) = (\widetilde{q}_1, \overline{q}) \in U_\mu \times \overline{\mathcal{Q}}$ and $A^\mu_{\widetilde{q}} \colon T_{\widetilde{q}}(U_\mu \times \overline{\mathcal{Q}}) \to Lie(\mathcal{G}_\mu)$ is calculated by

$$A^\mu_{\widetilde{q}} := \left[\widetilde{K}_1^{\mathcal{G}_\mu}(\widetilde{q})^{-1} \widetilde{K}_1^{\mathcal{Q}_1/\mathcal{G}_\mu}(\widetilde{q}) \; \widetilde{K}_1^{\mathcal{G}_\mu}(\widetilde{q})^{-1} \widetilde{K}_{12}^{\mathcal{G}_\mu}(\widetilde{q}) \cdots \; \widetilde{K}_1^{\mathcal{G}_\mu}(\widetilde{q})^{-1} \widetilde{K}_{1N}^{\mathcal{G}_\mu}(\widetilde{q}) \right]. \tag{5.32}$$

Here, according to the local trivialization that we chose we have the following form for the tensor $\mathbb{F}L_q$

$$\mathbb{F}L_q = \begin{bmatrix} K_1^{\mathcal{G}_\mu}((\mathfrak{h}, \widetilde{q})) & K_1^{\mathcal{Q}_1/\mathcal{G}_\mu}((\mathfrak{h}, \widetilde{q})) & K_{12}^{\mathcal{G}_\mu}((\mathfrak{h}, \widetilde{q})) & \cdots & K_{1N}^{\mathcal{G}_\mu}((\mathfrak{h}, \widetilde{q})) \\ K_2^{\mathcal{G}_\mu}((\mathfrak{h}, \widetilde{q})) & K_2^{\mathcal{Q}_1/\mathcal{G}_\mu}((\mathfrak{h}, \widetilde{q})) & K_{12}^{\mathcal{Q}_1/\mathcal{G}_\mu}((\mathfrak{h}, \widetilde{q})) & \cdots & K_{1N}^{\mathcal{Q}_1/\mathcal{G}_\mu}((\mathfrak{h}, \widetilde{q})) \\ K_{21}^{\mathcal{G}_\mu}((\mathfrak{h}, \widetilde{q})) & K_{22}^{\mathcal{Q}_1/\mathcal{G}_\mu}((\mathfrak{h}, \widetilde{q})) & K_{22}((\mathfrak{h}, \widetilde{q})) & \cdots & K_{2N}((\mathfrak{h}, \widetilde{q})) \\ \vdots & \vdots & \vdots & \ddots & \vdots \\ K_{N1}^{\mathcal{G}_\mu}((\mathfrak{h}, \widetilde{q})) & K_{N1}^{\mathcal{Q}_1/\mathcal{G}_\mu}((\mathfrak{h}, \widetilde{q})) & K_{N2}((\mathfrak{h}, \widetilde{q})) & \cdots & K_{NN}((\mathfrak{h}, \widetilde{q})) \end{bmatrix},$$

where $q = (\mathfrak{h}, \widetilde{q})$, $q_1 = \widetilde{\chi}(\mathfrak{h}, \widetilde{q}_1)$, and we have the following equalities:

$$\begin{bmatrix} K_1^{\mathcal{G}_\mu}((\mathfrak{h},\widetilde{q})) & K_1^{\mathcal{Q}_1/\mathcal{G}_\mu}((\mathfrak{h},\widetilde{q})) \\ K_2^{\mathcal{G}_\mu}((\mathfrak{h},\widetilde{q})) & K_2^{\mathcal{Q}_1/\mathcal{G}_\mu}((\mathfrak{h},\widetilde{q})) \end{bmatrix} = T^*_{(\mathfrak{h},\widetilde{q}_1)}\widetilde{\chi}\left(K_{11}(\widetilde{\chi}(\mathfrak{h},\widetilde{q}))\right) T_{(\mathfrak{h},\widetilde{q}_1)}\widetilde{\chi},$$

$$\begin{bmatrix} K_{12}^{\mathcal{G}_\mu}((\mathfrak{h},\widetilde{q})) & \cdots & K_{1N}^{\mathcal{G}_\mu}((\mathfrak{h},\widetilde{q})) \\ K_{12}^{\mathcal{Q}_1/\mathcal{G}_\mu}((\mathfrak{h},\widetilde{q})) & \cdots & K_{1N}^{\mathcal{Q}_1/\mathcal{G}_\mu}((\mathfrak{h},\widetilde{q})) \end{bmatrix} = T^*_{(\mathfrak{h},\widetilde{q}_1)}\widetilde{\chi}\left[K_{12}(\widetilde{\chi}(\mathfrak{h},\widetilde{q})) \cdots K_{1N}(\widetilde{\chi}(\mathfrak{h},\widetilde{q}))\right],$$

$$\begin{bmatrix} K_{21}^{\mathcal{G}_\mu}((\mathfrak{h},\widetilde{q})) & K_{21}^{\mathcal{Q}_1/\mathcal{G}_\mu}((\mathfrak{h},\widetilde{q})) \\ \vdots & \vdots \\ K_{N1}^{\mathcal{G}_\mu}((\mathfrak{h},\widetilde{q})) & K_{N1}^{\mathcal{Q}_1/\mathcal{G}_\mu}((\mathfrak{h},\widetilde{q})) \end{bmatrix} = \begin{bmatrix} K_{21}(\widetilde{\chi}(\mathfrak{h},\widetilde{q})) \\ \vdots \\ K_{N1}(\widetilde{\chi}(\mathfrak{h},\widetilde{q})) \end{bmatrix} T_{(\mathfrak{h},\widetilde{q}_1)}\widetilde{\chi}.$$

And, we have $\widetilde{K}_1^{\mathcal{G}_\mu}(\widetilde{q}) = K_1^{\mathcal{G}_\mu}((e_\mu,\widetilde{q}))$, $\widetilde{K}_1^{\mathcal{Q}_1/\mathcal{G}_\mu}(\widetilde{q}) = K_1^{\mathcal{Q}_1/\mathcal{G}_\mu}((e_\mu,\widetilde{q}))$, and $\widetilde{K}_{1\mathfrak{i}}^{\mathcal{G}_\mu}(\widetilde{q}) = K_{1\mathfrak{i}}^{\mathcal{G}_\mu}((e_\mu,\widetilde{q}))$ for all $\mathfrak{i} = 2, \cdots, N$. Here, $e_\mu \in \mathcal{G}_\mu$ is the identity element of the Lie group $\mathcal{G}_\mu \subseteq \mathcal{G} = \mathcal{Q}_1$.

Now, for any $\mathfrak{h} \in \mathcal{G}_\mu$ and $\forall q = (\mathfrak{h}, \widetilde{q}_1, \overline{q}) \in \mathcal{G}_\mu \times U_\mu \times \overline{\mathcal{Q}}$, we calculate the horizontal lift map $\widetilde{\mathrm{hl}}_q \colon T_{\widetilde{q}}(U_\mu \times \overline{\mathcal{Q}}) \to T_q\mathcal{Q}$ for the principal bundle $\widetilde{\pi} \colon \mathcal{Q} \to \widetilde{\mathcal{Q}}$ by

$$\widetilde{\mathrm{hl}}_q = \begin{bmatrix} -(T_{e_\mu}L_{\mathfrak{h}})A^\mu_{\widetilde{q}} \\ id_{T_{\widetilde{q}_1}U_\mu} \oplus id_{T_{\overline{q}}\overline{\mathcal{Q}}} \end{bmatrix}, \tag{5.33}$$

where $id_{T_{\widetilde{q}_1}U_\mu}$ is the identity map on the tangent space $T_{\widetilde{q}_1}U_\mu$. Let $\mu \in Lie^*(\mathcal{G})$ be a regular value of the momentum map $\mathbf{M}$. For a holonomic open-chain multi-body system with symmetry, the level set of the momentum map $\mathbf{M}$ at μ becomes

$$\mathbf{M}^{-1}(\mu) = \{\, p_q = (p_1, \cdots, p_N) \in T^*\mathcal{Q} \big|\, p_1 = T^*_{q_1}R_{q_1^{-1}}\mu\} \subset T^*\mathcal{Q}.$$

Furthermore, we determine $\alpha_\mu = \mathcal{A}^*\mu \in \Omega^1(\mathcal{Q})$ in the local trivialization by

$$\alpha_\mu(q) = \begin{bmatrix} T^*_{(\mathfrak{h},\widetilde{q}_1)}L_{(\mathfrak{h},\widetilde{q}_1)^{-1}} \\ A^*_{\overline{q}} \end{bmatrix} \mathrm{Ad}^*_{(\mathfrak{h},\widetilde{q}_1)}\mu = \begin{bmatrix} T^*_{(\mathfrak{h},\widetilde{q}_1)}L_{(\mathfrak{h},\widetilde{q}_1)^{-1}} \\ A^*_{\overline{q}} \end{bmatrix} \mathrm{Ad}^*_{(e_\mu,\widetilde{q}_1)}\mu, \tag{5.34}$$

where $(\mathfrak{h}, \widetilde{q}_1)^{-1} = \widetilde{\chi}^{-1}\left((\widetilde{\chi}(\mathfrak{h},\widetilde{q}_1))^{-1}\right)$, by definition. The second equality is true by the definition of the map $\widetilde{\chi}$, and because $\mathfrak{h} \in \mathcal{G}_\mu$.

Lemma 53. *Based on Theorem 27, the inverse of the map $\varphi_\mu \colon \boldsymbol{M}^{-1}/\mathcal{G}_\mu \to T^*\widetilde{\mathcal{Q}}$ is defined on $[T\widetilde{\pi}(\mathcal{V})]^0$ and in the local trivialization $\forall \widetilde{p}_{\widetilde{q}} = (\widetilde{p}_1, \overline{p}) \in T^*_{\widetilde{q}}(U_\mu \times \overline{\mathcal{Q}})$,*

$$\varphi_\mu^{-1}(\widetilde{p}_{\widetilde{q}}) = \begin{bmatrix} T^*_{(\mathfrak{h},\widetilde{q}_1)}R_{(\mathfrak{h},\widetilde{q}_1)^{-1}}(\mu) \\ \overline{p} + A^*_{\overline{q}}(Ad^*_{(e_\mu,\widetilde{q}_1)}\mu) \end{bmatrix}_\mu. \tag{5.35}$$

Proof. First we show that $\widetilde{p} \in [T\widetilde{\pi}(\mathcal{V})]^0$ if and only if $\widetilde{p}_1 = 0$. For any $\widetilde{p} \in [T\widetilde{\pi}(\mathcal{V})]^0$ and $\forall \xi \in Lie(\mathcal{G}) = Lie(\mathcal{Q}_1)$ we have

$$\langle (\widetilde{p}_1, \overline{p}), T\widetilde{\pi}(\xi_{\mathcal{Q}})\rangle = \left\langle \phi^*_q(0, \widetilde{p}_1, \overline{p}), \xi \right\rangle = \left\langle T^*_{e_1}R_{q_1}(0, \widetilde{p}_1), \xi \right\rangle = 0.$$

The first equality is true based on the definition of $\xi_{\mathcal{Q}}$ and the local trivialization that is chosen. The second equality is the consequence of the definition of the map ϕ in (5.26). Since the above equality should hold for every $\xi \in Lie(\mathcal{G})$ and the right translation map is a diffeomorphism $\forall q_1 \in \mathcal{Q}_1$, we have $\widetilde{p}_1 = 0$. Now, based on (5.34) and the definition of the map φ_μ in Theorem 27 we have the desired equation in the lemma. □

Based on the definition of $\widetilde{H}(\widetilde{p}_{\widetilde{q}}) := H_\mu \circ \varphi_\mu^{-1}(\widetilde{p}_{\widetilde{q}})$ and the above lemma, we calculate $\widetilde{H}$ on $[T\widetilde{\pi}(\mathcal{V})]^0$ using the local trivialization:

$$\widetilde{H}(\widetilde{p}_{\widetilde{q}}) = \frac{1}{2}\Big\langle (\mathrm{Ad}^*_{(e_\mu,\widetilde{q}_1)}\mu, \overline{p} + A^*_{\overline{q}}(\mathrm{Ad}^*_{(e_\mu,\widetilde{q}_1)}\mu)), \\ , \mathbb{F}L^{-1}_{(e_\mu,\widetilde{q}_1,\overline{q})}(\mathrm{Ad}^*_{(e_\mu,\widetilde{q}_1)}\mu, \overline{p} + A^*_{\overline{q}}(\mathrm{Ad}^*_{(e_\mu,\widetilde{q}_1)}\mu))\Big\rangle + V(e_\mu, \widetilde{q}_1, \overline{q}). \quad (5.36)$$

Now we are ready to state the main result of this section in the following theorem.

Theorem 54. *Let $\mu \in Lie^*(\mathcal{G})$ be a regular value of the momentum map $\boldsymbol{M}$. A holonomic open-chain multi-body system with symmetry $(T^*\mathcal{Q}, \Omega_{can}, H, K, \mathcal{G})$ is reduced to a Hamiltonian mechanical system $([T\widetilde{\pi}(\mathcal{V})]^0 \subseteq T^*\widetilde{\mathcal{Q}}, (\widetilde{\Omega}_{can} - \Xi_\mu)|_{[T\widetilde{\pi}(\mathcal{V})]^0}, \widetilde{H}, \widetilde{K})$, where $\widetilde{\Omega}_{can}$ is the canonical 2-form on $T^*\widetilde{\mathcal{Q}}$, $\widetilde{H}$ is defined by (5.36) and $\widetilde{K}$ is a metric on $\widetilde{\mathcal{Q}}$ such that $\forall \widetilde{u}_{\widetilde{q}}, \widetilde{w}_{\widetilde{q}} \in T_{\widetilde{q}}\widetilde{\mathcal{Q}}$ we have*

$$\widetilde{K}_{\widetilde{q}}(\widetilde{u}_{\widetilde{q}}, \widetilde{w}_{\widetilde{q}}) = K_q(\widetilde{\mathrm{hl}}_q(\widetilde{u}_{\widetilde{q}}), \widetilde{\mathrm{hl}}_q(\widetilde{w}_{\widetilde{q}})).$$

Here, in the local coordinates Ξ_μ is calculated as follows. Let $\pi_{\widetilde{\mathcal{Q}}} \colon T^*\widetilde{\mathcal{Q}} \to \widetilde{\mathcal{Q}}$ be the canonical projection map of the cotangent bundle and let $T\pi_{\widetilde{\mathcal{Q}}} \colon T(T^*\widetilde{\mathcal{Q}}) \to T\widetilde{\mathcal{Q}}$ be its induced map on the tangent bundles. For every $\widetilde{\alpha}_{\widetilde{q}} \in T^*\widetilde{\mathcal{Q}}$ and $\forall \widetilde{\mathcal{U}}, \widetilde{\mathcal{W}} \in \mathfrak{X}(T^*\widetilde{\mathcal{Q}})$ we introduce $\widetilde{u}_{\widetilde{q}} = T_{\widetilde{\alpha}_{\widetilde{q}}}\pi_{\widetilde{\mathcal{Q}}}(\widetilde{\mathcal{U}}_{\widetilde{\alpha}_{\widetilde{q}}})$ and $\widetilde{w}_{\widetilde{q}} = T_{\widetilde{\alpha}_{\widetilde{q}}}\pi_{\widetilde{\mathcal{Q}}}(\widetilde{\mathcal{W}}_{\widetilde{\alpha}_{\widetilde{q}}})$. In the local trivialization, we have $\widetilde{q} = (\widetilde{q}_1, \overline{q}) \in U_\mu \times \overline{\mathcal{Q}}$, $\widetilde{u}_{\widetilde{q}} = (\widetilde{u}_1, \overline{u})$ and $\widetilde{w}_{\widetilde{q}} = (\widetilde{w}_1, \overline{w})$:

$$(\Xi_\mu)_{\widetilde{\alpha}_{\widetilde{q}}}(\widetilde{\mathcal{U}}_{\widetilde{\alpha}_{\widetilde{q}}}, \widetilde{\mathcal{W}}_{\widetilde{\alpha}_{\widetilde{q}}}) = \Big\langle \mu, -Ad_{\chi_\mu(\widetilde{q}_1)}\Big([A_{\overline{q}}\overline{u}, A_{\overline{q}}\overline{w}] + (\frac{\partial A_{\overline{q}}}{\partial \overline{q}}\overline{w})\overline{u} - (\frac{\partial A_{\overline{q}}}{\partial \overline{q}}\overline{u})\overline{w}\Big) \\ + \Big[\Big(-A^\mu_{\widetilde{q}}\widetilde{u} + (T_{\chi_\mu(\widetilde{q}_1)}R_{\chi_\mu(\widetilde{q}_1)^{-1}})(T_{\widetilde{q}_1}\chi_\mu)(\widetilde{u}_1) + Ad_{\chi_\mu(\widetilde{q}_1)}A_{\overline{q}}\overline{u}\Big), \\ \Big(-A^\mu_{\widetilde{q}}\widetilde{w} + (T_{\chi_\mu(\widetilde{q}_1)}R_{\chi_\mu(\widetilde{q}_1)^{-1}})(T_{\widetilde{q}_1}\chi_\mu)(\widetilde{w}_1) + Ad_{\chi_\mu(\widetilde{q}_1)}A_{\overline{q}}\overline{w}\Big)\Big]\Big\rangle, \quad (5.37)$$

where $\chi_\mu \colon U_\mu \hookrightarrow \mathcal{Q}_1$ is the embedding that is used to define the local trivialization map $\widetilde{\chi}$.

Finally, in local coordinates we have $\widetilde{X} = (\dot{\widetilde{q}}_1, \dot{\overline{q}}, \dot{\overline{p}})$ as a vector field on $[T\widetilde{\pi}(\mathcal{V})]^0$. Hamilton's equation in the vector sub-bundle $[T\widetilde{\pi}(\mathcal{V})]^0$ of the cotangent bundle of μ-shape space reads

$$\iota_{(\dot{\widetilde{q}}_1, \dot{\overline{q}}, \dot{\overline{p}})}(-d\overline{p} \wedge d\overline{q} - \Xi_\mu) = \frac{\partial \widetilde{H}}{\partial \overline{p}}d\overline{p} + \frac{\partial \widetilde{H}}{\partial \widetilde{q}_1}d\widetilde{q}_1 + \frac{\partial \widetilde{H}}{\partial \overline{q}}d\overline{q},$$

where Ξ_μ is calculated by (5.37).

Proof. In order to prove (5.37), we start with (2.19):

$$(\Xi_\mu)_{\widetilde{\alpha}_{\widetilde{q}}}(\widetilde{\mathcal{U}}_{\widetilde{\alpha}_{\widetilde{q}}}, \widetilde{\mathcal{W}}_{\widetilde{\alpha}_{\widetilde{q}}}) \\ = \Big\langle \mu, -\mathcal{A}_q([\mathrm{hor}(\widetilde{\mathrm{hl}}(\widetilde{u})), \mathrm{hor}(\widetilde{\mathrm{hl}}(\widetilde{w}))]_q) + [\mathcal{A}_q(\widetilde{\mathrm{hl}}_q(\widetilde{u}_{\widetilde{q}})), \mathcal{A}_q(\widetilde{\mathrm{hl}}_q(\widetilde{w}_{\widetilde{q}}))]\Big\rangle.$$

Using the local trivialization, we write $q = (\mathfrak{h}, \widetilde{q}_1, \overline{q}) \in \mathcal{G}_\mu \times U_\mu \times \overline{\mathcal{Q}}$, and accordingly $\widetilde{u} = (\widetilde{u}_1, \overline{u})$ and $\widetilde{w} = (\widetilde{w}_1, \overline{w})$. By (5.33), the horizontal lift of $\widetilde{u}$ and $\widetilde{w}$ can be calculated as

$$\widetilde{\mathrm{hl}}_q(\widetilde{u}_{\widetilde{q}}) = (-(T_{e_\mu} L_{\mathfrak{h}}) A^\mu_{\widetilde{q}} \widetilde{u}, \widetilde{u}_1, \overline{u}), \qquad \widetilde{\mathrm{hl}}_q(\widetilde{w}_{\widetilde{q}}) = (-(T_{e_\mu} L_{\mathfrak{h}}) A^\mu_{\widetilde{q}} \widetilde{w}, \widetilde{w}_1, \overline{w}),$$

and using (5.30), the terms $\mathrm{hor}(\widetilde{\mathrm{hl}}(\widetilde{u}))$ and $\mathrm{hor}(\widetilde{\mathrm{hl}}(\widetilde{w}))$ are

$$\begin{aligned}
\mathrm{hor}_q(\widetilde{\mathrm{hl}}_q(\widetilde{u}_{\widetilde{q}})) &= (-(T_{(e_\mu, \widetilde{e}_1)} L_{(\mathfrak{h}, \widetilde{q}_1)}) A_{\overline{q}} \overline{u}, \overline{u}), \\
\mathrm{hor}_q(\widetilde{\mathrm{hl}}_q(\widetilde{w}_{\widetilde{q}})) &= (-(T_{(e_\mu, \widetilde{e}_1)} L_{(\mathfrak{h}, \widetilde{q}_1)}) A_{\overline{q}} \overline{w}, \overline{w}).
\end{aligned}$$

Now, by (5.29) we have

$$\mathcal{A}_q(\widetilde{\mathrm{hl}}_q(\widetilde{u}_{\widetilde{q}})) = \mathrm{Ad}_{(\mathfrak{h}, \widetilde{q}_1)} \left((T_{(\mathfrak{h}, \widetilde{q}_1)} L_{(\mathfrak{h}, \widetilde{q}_1)^{-1}}) \left(-(T_{e_\mu} L_{\mathfrak{h}}) A^\mu_{\widetilde{q}} \widetilde{u}, \widetilde{u}_1 \right) + A_{\overline{q}} \overline{u} \right). \tag{5.38}$$

Using the definition of the local trivialization map $\widetilde{\chi}$ we have

$$\begin{aligned}
&T_{(\mathfrak{h}, \widetilde{q}_1)} L_{(\mathfrak{h}, \widetilde{q}_1)^{-1}} \left(-(T_{e_\mu} L_{\mathfrak{h}}) A^\mu_{\widetilde{q}} \widetilde{u}, \widetilde{u}_1 \right) \\
&\quad = T_{\mathfrak{h}\chi_\mu(\widetilde{q}_1)} L_{\chi_\mu(\widetilde{q}_1)^{-1}\mathfrak{h}^{-1}} \left(T_{\mathfrak{h}} R_{\chi_\mu(\widetilde{q}_1)} (-(T_{e_1} L_{\mathfrak{h}}) A^\mu_{\widetilde{q}} \widetilde{u}) + (T_{\chi_\mu(\widetilde{q}_1)} L_{\mathfrak{h}})(T_{\widetilde{q}_1} \chi_\mu)(\widetilde{u}_1) \right) \\
&\quad = \mathrm{Ad}_{\chi_\mu(\widetilde{q}_1)^{-1}} (-A^\mu_{\widetilde{q}} \widetilde{u}) + (T_{\chi_\mu(\widetilde{q}_1)} L_{\chi_\mu(\widetilde{q}_1)^{-1}})(T_{\widetilde{q}_1} \chi_\mu)(\widetilde{u}_1),
\end{aligned}$$

where $\chi_\mu \colon U_\mu \hookrightarrow \mathcal{Q}_1$ is the embedding map that is defined using the exponential map. Therefore, we have

$$\mathcal{A}_q(\widetilde{\mathrm{hl}}_q(\widetilde{u}_{\widetilde{q}})) = \mathrm{Ad}_{\mathfrak{h}} \left(-A^\mu_{\widetilde{q}} \widetilde{u} + (T_{\chi_\mu(\widetilde{q}_1)} R_{\chi_\mu(\widetilde{q}_1)^{-1}})(T_{\widetilde{q}_1} \chi_\mu)(\widetilde{u}_1) + \mathrm{Ad}_{\chi_\mu(\widetilde{q}_1)} A_{\overline{q}} \overline{u} \right).$$

Similarly,

$$\mathcal{A}_q(\widetilde{\mathrm{hl}}_q(\widetilde{w}_{\widetilde{q}})) = \mathrm{Ad}_{\mathfrak{h}} \left(-A^\mu_{\widetilde{q}} \widetilde{w} + (T_{\chi_\mu(\widetilde{q}_1)} R_{\chi_\mu(\widetilde{q}_1)^{-1}})(T_{\widetilde{q}_1} \chi_\mu)(\widetilde{w}_1) + \mathrm{Ad}_{\chi_\mu(\widetilde{q}_1)} A_{\overline{q}} \overline{w} \right).$$

Since for all $\mathfrak{g} \in \mathcal{G}$ and $\xi, \eta \in Lie(\mathcal{G})$ we have the equality $\mathrm{Ad}_{\mathfrak{g}}[\xi, \eta] = [\mathrm{Ad}_{\mathfrak{g}}\xi, \mathrm{Ad}_{\mathfrak{g}}\eta]$:

$$\begin{aligned}
&[\mathcal{A}_q(\widetilde{\mathrm{hl}}_q(\widetilde{u}_{\widetilde{q}})), \mathcal{A}_q(\widetilde{\mathrm{hl}}_q(\widetilde{w}_{\widetilde{q}}))] \\
&\quad = \mathrm{Ad}_{\mathfrak{h}} \Big[\left(-A^\mu_{\widetilde{q}} \widetilde{u} + (T_{\chi_\mu(\widetilde{q}_1)} R_{\chi_\mu(\widetilde{q}_1)^{-1}})(T_{\widetilde{q}_1} \chi_\mu)(\widetilde{u}_1) + \mathrm{Ad}_{\chi_\mu(\widetilde{q}_1)} A_{\overline{q}} \overline{u} \right), \\
&\qquad\qquad \left(-A^\mu_{\widetilde{q}} \widetilde{w} + (T_{\chi_\mu(\widetilde{q}_1)} R_{\chi_\mu(\widetilde{q}_1)^{-1}})(T_{\widetilde{q}_1} \chi_\mu)(\widetilde{w}_1) + \mathrm{Ad}_{\chi_\mu(\widetilde{q}_1)} A_{\overline{q}} \overline{w} \right) \Big].
\end{aligned}$$

For all $q \in \mathcal{Q}$, to calculate the Lie bracket $[\mathrm{hor}(\widetilde{\mathrm{hl}}(\widetilde{u})), \mathrm{hor}(\widetilde{\mathrm{hl}}(\widetilde{w}))]_q$, we express the vector fields $\mathrm{hor}(\widetilde{\mathrm{hl}}(\widetilde{u}))$ and $\mathrm{hor}(\widetilde{\mathrm{hl}}(\widetilde{w}))$ in coordinates:

$$\begin{aligned}
\mathrm{hor}_q(\widetilde{\mathrm{hl}}_q(\widetilde{u}_{\widetilde{q}})) &= \left(-(T_{(e_\mu, \widetilde{e}_1)} L_{(\mathfrak{h}, \widetilde{q}_1)}) A_{\overline{q}} \overline{u} \right) \frac{\partial}{\partial(\mathfrak{h}, \widetilde{q}_1)} + \overline{u} \frac{\partial}{\partial \overline{q}} \\
\mathrm{hor}_q(\widetilde{\mathrm{hl}}_q(\widetilde{w}_{\widetilde{q}})) &= \left(-(T_{(e_\mu, \widetilde{e}_1)} L_{(\mathfrak{h}, \widetilde{q}_1)}) A_{\overline{q}} \overline{w} \right) \frac{\partial}{\partial(\mathfrak{h}, \widetilde{q}_1)} + \overline{w} \frac{\partial}{\partial \overline{q}}.
\end{aligned}$$

In any coordinates chosen for $\mathcal{Q}_{\mathfrak{i}}$ ($\mathfrak{i} = 2, \cdots, N$), $\mathcal{G}_\mu$ and $\mathcal{Q}_1/\mathcal{G}_\mu$ we have

$$\begin{aligned}
&[\mathrm{hor}(\widetilde{\mathrm{hl}}(\widetilde{u})), \mathrm{hor}(\widetilde{\mathrm{hl}}(\widetilde{w}))] \\
&\quad = [\big((T_{(e_\mu,\widetilde{e}_1)}L_{(\mathfrak{h},\widetilde{q}_1)})A_{\overline{q}}\overline{u}\big)\,\frac{\partial}{\partial(\mathfrak{h},\widetilde{q}_1)}, \big((T_{(e_\mu,\widetilde{e}_1)}L_{(\mathfrak{h},\widetilde{q}_1)})A_{\overline{q}}\overline{w}\big)\,\frac{\partial}{\partial(\mathfrak{h},\widetilde{q}_1)}] \\
&\quad + [\overline{u}\frac{\partial}{\partial\overline{q}}, \overline{w}\frac{\partial}{\partial\overline{q}}] + [\big((T_{(e_\mu,\widetilde{e}_1)}L_{(\mathfrak{h},\widetilde{q}_1)})A_{\overline{q}}\overline{w}\big)\,\frac{\partial}{\partial(\mathfrak{h},\widetilde{q}_1)}, \overline{u}\frac{\partial}{\partial\overline{q}}] \\
&\quad - [\big((T_{(e_\mu,\widetilde{e}_1)}L_{(\mathfrak{h},\widetilde{q}_1)})A_{\overline{q}}\overline{u}\big)\,\frac{\partial}{\partial(\mathfrak{h},\widetilde{q}_1)}, \overline{w}\frac{\partial}{\partial\overline{q}}]
\end{aligned}$$

Based on the definition of the Lie bracket for Lie groups, $\forall \overline{q} \in \overline{\mathcal{Q}}$ the first bracket on the right hand side can be written as

$$\begin{aligned}
&[\big((T_{(e_\mu,\widetilde{e}_1)}L_{(\mathfrak{h},\widetilde{q}_1)})A_{\overline{q}}\overline{u}\big)\,\frac{\partial}{\partial(\mathfrak{h},\widetilde{q}_1)}, \big((T_{(e_\mu,\widetilde{e}_1)}L_{(\mathfrak{h},\widetilde{q}_1)})A_{\overline{q}}\overline{w}\big)\,\frac{\partial}{\partial(\mathfrak{h},\widetilde{q}_1)}] \\
&\quad = \big((T_{(e_\mu,\widetilde{e}_1)}L_{(\mathfrak{h},\widetilde{q}_1)})[A_{\overline{q}}\overline{u}, A_{\overline{q}}\overline{w}]\big)\,\frac{\partial}{\partial(\mathfrak{h},\widetilde{q}_1)} \\
&\quad + \left((T_{(e_\mu,\widetilde{e}_1)}L_{(\mathfrak{h},\widetilde{q}_1)})A_{\overline{q}}\frac{\partial\overline{w}}{\partial(\mathfrak{h},\widetilde{q}_1)}\,\big((T_{(e_\mu,\widetilde{e}_1)}L_{(\mathfrak{h},\widetilde{q}_1)})A_{\overline{q}}\overline{u}\big)\right)\frac{\partial}{\partial(\mathfrak{h},\widetilde{q}_1)} \\
&\quad - \left((T_{(e_\mu,\widetilde{e}_1)}L_{(\mathfrak{h},\widetilde{q}_1)})A_{\overline{q}}\frac{\partial\overline{u}}{\partial(\mathfrak{h},\widetilde{q}_1)}\,\big((T_{(e_\mu,\widetilde{e}_1)}L_{(\mathfrak{h},\widetilde{q}_1)})A_{\overline{q}}\overline{w}\big)\right)\frac{\partial}{\partial(\mathfrak{h},\widetilde{q}_1)}.
\end{aligned}$$

The second bracket is equal to

$$[\overline{u}\frac{\partial}{\partial\overline{q}}, \overline{w}\frac{\partial}{\partial\overline{q}}] = \left(\frac{\partial\overline{w}}{\partial\overline{q}}\overline{u}\right)\frac{\partial}{\partial\overline{q}} - \left(\frac{\partial\overline{u}}{\partial\overline{q}}\overline{w}\right)\frac{\partial}{\partial\overline{q}}.$$

We calculate the third bracket as

$$\begin{aligned}
&[\big((T_{(e_\mu,\widetilde{e}_1)}L_{(\mathfrak{h},\widetilde{q}_1)})A_{\overline{q}}\overline{w}\big)\,\frac{\partial}{\partial(\mathfrak{h},\widetilde{q}_1)}, \overline{u}\frac{\partial}{\partial\overline{q}}] = \left(\frac{\partial\overline{u}}{\partial(\mathfrak{h},\widetilde{q}_1)}(T_{(e_\mu,\widetilde{e}_1)}L_{(\mathfrak{h},\widetilde{q}_1)})A_{\overline{q}}\overline{w}\right)\frac{\partial}{\partial\overline{q}} \\
&\quad - \left((T_{(e_\mu,\widetilde{e}_1)}L_{(\mathfrak{h},\widetilde{q}_1)})\left(\frac{\partial A_{\overline{q}}}{\partial\overline{q}}\overline{u}\right)\overline{w} + (T_{(e_\mu,\widetilde{e}_1)}L_{(\mathfrak{h},\widetilde{q}_1)})A_{\overline{q}}\frac{\partial\overline{w}}{\partial\overline{q}}\overline{u}\right)\frac{\partial}{\partial(\mathfrak{h},\widetilde{q}_1)}.
\end{aligned}$$

Similarly, the last bracket can be calculated. Accordingly, using (5.29),

$$\begin{aligned}
&\mathcal{A}_q([\mathrm{hor}(\widetilde{\mathrm{hl}}(\widetilde{u})), \mathrm{hor}(\widetilde{\mathrm{hl}}(\widetilde{w}))]_q) \\
&\qquad = \mathrm{Ad}_{(\mathfrak{h},\widetilde{q}_1)}\left([A_{\overline{q}}\overline{u}, A_{\overline{q}}\overline{w}] + \left(\frac{\partial A_{\overline{q}}}{\partial\overline{q}}\overline{w}\right)\overline{u} - \left(\frac{\partial A_{\overline{q}}}{\partial\overline{q}}\overline{u}\right)\overline{w}\right).
\end{aligned}$$

Finally, knowing that $\mathfrak{h} \in \mathcal{G}_\mu$, we have the equation for Ξ_μ in the theorem.

Regarding Hamilton's equation, we should note that based on Lemma 53 the restriction of $\widetilde{\Omega}_{can}$ to $[T\widetilde{\pi}(\mathcal{V})]^0$ is equal to $-d\overline{p} \wedge d\overline{q}$, in coordinates. □

Corollary 55. *Let us assume that $\mathcal{G}_\mu = \mathcal{G}$, in the above theorem. A holonomic open-chain multi-body system with symmetry $(T^*\mathcal{Q}, \Omega_{can}, H, K, \mathcal{G})$ is reduced to a Hamiltonian mechanical system $(T^*\overline{\mathcal{Q}}, \overline{\Omega}_{can} - \Xi_\mu, \overline{H}, \overline{K})$, where $\overline{\Omega}_{can}$ is the canonical 2-form on $T^*\overline{\mathcal{Q}}$,*

$$\overline{H}(\overline{p}_{\overline{q}}) := \frac{1}{2}\left\langle (\mu, \overline{p} + A^*_{\overline{q}}\mu), \mathbb{F}L^{-1}_{(e_1,\overline{q})}(\mu, \overline{p} + A^*_{\overline{q}}\mu)\right\rangle + V(e_1, \overline{q}), \tag{5.39}$$

and $\overline{K}$ is a metric on $\overline{\mathcal{Q}}$ such that $\forall \overline{u}_{\overline{q}}, \overline{w}_{\overline{q}} \in T_{\overline{q}}\overline{\mathcal{Q}}$ we have

$$\overline{K}_{\overline{q}}(\overline{u}_{\overline{q}}, \overline{u}_{\overline{q}}) = K_q(\mathrm{hl}_q(\overline{u}_{\overline{q}}), \mathrm{hl}_q(\overline{w}_{\overline{q}})).$$

Here, in the local coordinates Ξ_μ is calculated by a simpler formulation. Let $\pi_{\overline{\mathcal{Q}}}\colon T^*\overline{\mathcal{Q}} \to \overline{\mathcal{Q}}$ be the canonical projection map of the cotangent bundle and let $T\pi_{\overline{\mathcal{Q}}}\colon T(T^*\overline{\mathcal{Q}}) \to T\overline{\mathcal{Q}}$ be its induced map on the tangent bundles. For every $\overline{\alpha}_{\overline{q}} \in T^*\overline{\mathcal{Q}}$ and $\forall \overline{\mathcal{U}}, \overline{\mathcal{W}} \in \mathfrak{X}(T^*\overline{\mathcal{Q}})$ we introduce $\overline{u}_{\overline{q}} = T_{\overline{\alpha}_{\overline{q}}}\pi_{\overline{\mathcal{Q}}}(\overline{\mathcal{U}}_{\overline{\alpha}_{\overline{q}}})$ and $\overline{w}_{\overline{q}} = T_{\overline{\alpha}_{\overline{q}}}\pi_{\overline{\mathcal{Q}}}(\overline{\mathcal{W}}_{\overline{\alpha}_{\overline{q}}})$. We have

$$(\Xi_\mu)_{\overline{\alpha}_{\overline{q}}}(\overline{\mathcal{U}}_{\overline{\alpha}_{\overline{q}}}, \overline{\mathcal{W}}_{\overline{\alpha}_{\overline{q}}}) = \left\langle \mu, -[A_{\overline{q}}\overline{u}, A_{\overline{q}}\overline{w}] - (\frac{\partial A_{\overline{q}}}{\partial \overline{q}}\overline{w})\overline{u} + (\frac{\partial A_{\overline{q}}}{\partial \overline{q}}\overline{u})\overline{w} \right\rangle. \tag{5.40}$$

Finally, in local coordinates we have $\overline{X} = (\dot{\overline{q}}, \dot{\overline{p}})$ as a vector field on $T^*\overline{\mathcal{Q}}$. Hamilton's equation in the cotangent bundle of shape space reads

$$\iota_{(\dot{\overline{q}}, \dot{\overline{p}})}(-d\overline{p} \wedge d\overline{q} - \Xi_\mu) = \frac{\partial \overline{H}}{\partial \overline{p}} d\overline{p} + \frac{\partial \overline{H}}{\partial \overline{q}} d\overline{q},$$

where Ξ_μ is calculated by (5.40).

We show the isotropy groups for different types of displacement subgroups in Table 2. Note that, for different values of $\mu \in Lie^*(\mathcal{G})$, the isotropy groups are isomorphic to the groups listed in the table, and the isomorphism map is conjugation by an element of $SE(3)$. In this table we consider the configuration manifold of the first joint as a Lie sub-group of $SE(3)$ whose Lie algebra is a vector space isomorphic to $so(3) \oplus \mathbb{R}^3$, where $so(3)$ is the Lie algebra of $SO(3)$. For any element $\xi \in se(3)$, we call its component in $\mathbb{R}^3$ the linear and the one in $so(3)$ the angular component of ξ, where $se(3)$ denotes the Lie algebra of $SE(3)$.

Table 2 displacement subgroups and their corresponding isotropy groups

displacement subgroups		$\mathcal{G}_\mu$ $(\mu = (\mu_v, \mu_\omega)^a)$		
$\mathcal{Q}_1 \cong \mathcal{G}$	$\mu_v \neq 0, \mu_\omega \neq 0$	$\mu_\omega \neq 0, \mu_v = 0$	$\mu_\omega = 0, \mu_v \neq 0$	$\mu_v = \mu_\omega = 0$
$SE(3)$	$SO(2) \times \mathbb{R}$	$SE(2) \times \mathbb{R}$	$SO(2) \times \mathbb{R}$	$SE(3)$
$SE(2) \times \mathbb{R}$	$\mathbb{R}^2$ $(SE(2) \times \mathbb{R})^b$	$SE(2) \times \mathbb{R}$	$\mathbb{R}^2$ $(SE(2) \times \mathbb{R})^b$	$SE(2) \times \mathbb{R}$
$SE(2)$	$\mathbb{R}$	$SE(2)$	$\mathbb{R}$	$SE(2)$
$SO(3)$			$SO(2)$	$SO(3)$
$\mathbb{R}^3$		$\mathbb{R}^3$		$\mathbb{R}^3$
$H_p \ltimes \mathbb{R}^2$	$\mathbb{R}$	$H_p \ltimes \mathbb{R}^2$	$\mathbb{R}$	$H_p \ltimes \mathbb{R}^2$
$SO(2) \times \mathbb{R}$	$SO(2) \times \mathbb{R}$	$SO(2) \times \mathbb{R}$	$SO(2) \times \mathbb{R}$	$SO(2) \times \mathbb{R}$
$\mathbb{R}^2$		$\mathbb{R}^2$		$\mathbb{R}^2$
$SO(2)$			$SO(2)$	$SO(2)$
$\mathbb{R}$		$\mathbb{R}$		$\mathbb{R}$
H_p	H_p			H_p

[a] μ_v is the linear component and μ_ω is the angular component of the momentum.
[b] If the linear momentum is in the direction of the allowed direction of rotation in the space.

5.1 Further Symmetries of Open-chain Multi-body Systems

In this subsection we introduce a number of sufficient conditions under which the kinetic energy metric of a holonomic open-chain multi-body system admits further symmetries. That is, the system is invariant (in the sense that was presented in the previous section) under the action of other groups in addition to the one presented in Theorem 51. We investigate two approaches:

AP1) Identifying symmetry groups due to left invariance of the kinetic energy metric h on $\mathcal{P} = SE(3) \times \cdots \times SE(3)$. See Section 4 for the definition of the metric h.
AP2) Identifying symmetry groups by studying the metric K on $\mathcal{Q}$.

5.1.1 Identifying Symmetry Groups using AP1

As for the approach AP1, we consider the embedding $F\colon \mathcal{Q} \to \mathcal{P}$, defined by (3.22), which determines the pose of the centre of mass of all bodies with respect to the inertial coordinate frame.

$$F(q) = (q_1 r_{cm,1}, q_1 q_2 r_{cm,2}, \cdots, q_1 \cdots q_N r_{cm,N}),$$

where $r_{cm,i}$ $(i = 1, \cdots, N)$ is the initial pose of a coordinate frame attached to the centre of mass of body B_i with respect to the inertial coordinate frame, i.e., B_0.

For any element $(\mathfrak{p}_{1,0}, \cdots, \mathfrak{p}_{N,0}) \in \mathcal{P}$ we define the group action $\Theta^{\mathcal{N}}_{(\mathfrak{p}_{1,0},\cdots,\mathfrak{p}_{N,0})}$ $: \mathcal{P} \to \mathcal{P}$ by

$$\Theta^{\mathcal{N}}_{(\mathfrak{p}_{1,0},\cdots,\mathfrak{p}_{N,0})}(\mathfrak{p}) := (\mathfrak{p}_{1,0}\mathfrak{p}_1, (\mathfrak{p}_{1,0}\mathfrak{p}_{2,0})\mathfrak{p}_2, \cdots, (\mathfrak{p}_{1,0} \cdots \mathfrak{p}_{N,0})\mathfrak{p}_N),$$

where $\mathfrak{p} = (\mathfrak{p}_1, \cdots, \mathfrak{p}_N) \in \mathcal{P}$. Since the metric h on $\mathcal{P}$ is left-invariant, it is also invariant under this action. That is, we have $T^*\Theta^{\mathcal{N}}_{(\mathfrak{p}_{1,0},\cdots,\mathfrak{p}_{N,0})}(h) = h$. This action induces an action on $\mathcal{Q}$ by the embedding F, if and only if the image of the map F, i.e., $F(\mathcal{Q})$, is invariant under the action $\Theta^{\mathcal{N}}$ for a Lie subgroup of $\mathcal{P}$. We denote this Lie subgroup by $\mathcal{G}_1 \times \cdots \mathcal{G}_N$, where $\mathcal{G}_i \subseteq SE(3)$ $(i = 1, \cdots, N)$ is a Lie subgroup of $SE(3)$. Then the induced action on $\mathcal{Q}$, denoted by $\Phi^{\mathcal{N}}_{(\mathfrak{p}_{1,0},\cdots,\mathfrak{p}_{N,0})} : \mathcal{Q} \to \mathcal{Q}$, is defined by $\Phi^{\mathcal{N}}_{(\mathfrak{p}_{1,0},\cdots,\mathfrak{p}_{N,0})} := F^{-1} \circ \Theta^{\mathcal{N}}_{(\mathfrak{p}_{1,0},\cdots,\mathfrak{p}_{N,0})} \circ F$, where $(\mathfrak{p}_{1,0}, \cdots, \mathfrak{p}_{N,0}) \in \mathcal{G}_1 \times \cdots \mathcal{G}_N$. Here, $F^{-1}\colon F(\mathcal{Q}) \to \mathcal{Q}$ is only defined on the image of the map F. In order to identify the group $\mathcal{G}_1 \times \cdots \times \mathcal{G}_N$, we impose the condition that $F(\mathcal{Q})$ is invariant under the action of this group. By the definition of the map F and $\Theta^{\mathcal{N}}_{(\mathfrak{p}_{1,0},\cdots,\mathfrak{p}_{N,0})}$, we have

$$\begin{aligned}\Theta^{\mathcal{N}}_{(\mathfrak{p}_{1,0},\cdots,\mathfrak{p}_{N,0})} &\circ F(q) \\ &= (\mathfrak{p}_{1,0} q_1 r_{cm,1}, (\mathfrak{p}_{1,0}\mathfrak{p}_{2,0}) q_1 q_2 r_{cm,2}, \cdots, (\mathfrak{p}_{1,0} \cdots \mathfrak{p}_{N,0}) q_1 \cdots q_N r_{cm,N})\end{aligned}$$

The image of F is invariant under the group action if and only if we have the following conditions:

$$\begin{aligned}&\mathfrak{p}_{1,0} \in \mathcal{Q}_1, \\ &q_1^{-1}\mathfrak{p}_{2,0} q_1 \in \mathcal{Q}_2, \qquad \forall q_1 \in \mathcal{Q}_1 \\ &\vdots \\ &(q_1 \cdots q_{N-1})^{-1}\mathfrak{p}_{N,0}(q_1 \cdots q_{N-1}) \in \mathcal{Q}_N. \qquad \forall q_1 \in \mathcal{Q}_1 \text{ and } \cdots \text{ and } \forall q_{N-1} \in \mathcal{Q}_{N-1}\end{aligned}$$

Hence, the biggest symmetry group $\mathcal{G}_1 \times \cdots \mathcal{G}_N$ that leaves the kinetic energy metric K invariant under the induced action $\Phi^{\mathcal{N}}$ is equal to

$$\mathcal{G}_1 \times \cdots \mathcal{G}_N = \{ (\mathfrak{p}_{1,0}, \cdots, \mathfrak{p}_{N,0}) | \, \mathfrak{p}_{1,0} \in \mathcal{Q}_1, \mathfrak{p}_{2,0} \in \bigcap_{q_1 \in \mathcal{Q}_1} (q_1 Q_2 q_1^{-1}), \cdots$$
$$, \mathfrak{p}_{N,0} \in \bigcap_{\substack{q_1 \in \mathcal{Q}_1 \\ \cdots \\ q_{N-1} \in \mathcal{Q}_{N-1}}} ((q_1 \cdots q_{N-1}) \mathcal{Q}_N (q_1 \cdots q_{N-1})^{-1}) \} \subseteq \mathcal{Q}_1 \times \cdots \times \mathcal{Q}_N.$$

Noteworthy examples of open-chain multi-body systems whose kinetic energy metric K is invariant under the action of this group include but not limited to the systems with identical multi-degree-of-freedom joints and systems with commutative joints. In general, this symmetry group may be as small as $\mathcal{G}_1 = \mathcal{Q}_1$, specially when most of the joints are actuated, since the actuation force can break the symmetry.

5.1.2 Identifying Symmetry Groups using AP2

For any velocity vector $\dot{q} \in T_q \mathcal{Q}$, we denote the left translation of $\dot{q}$ to $Lie(\mathcal{Q})$ by

$$\tau = (\tau_1, \cdots, \tau_N) := q^{-1} \dot{q} = (q_1^{-1} \dot{q}_1, \cdots, q_N^{-1} \dot{q}_N) \in Lie(\mathcal{Q})$$

Now let ${}^i\tau_i^j$ $(i, j = 0, \cdots, N)$ be the relative twist of the body B_i with respect to B_j and expressed in the coordinate frame attached to B_i. In order to determine the kinetic energy of an open-chain multi-body system we need to have the relative twist of each body B_i with respect to B_0 and expressed in a coordinate frame attached to the centre of mass of B_i, i.e.,

$${}^i\tau_i^0(q, \tau) = \mathrm{Ad}_{r_{cm,i}^{-1}} \left(\mathrm{Ad}_{(q_2 \cdots q_i)^{-1}}(\tau_1) + \cdots + \mathrm{Ad}_{q_i^{-1}}(\tau_{i-1}) + \tau_i \right)$$

for a sequence of bodies from B_0 to B_i [7]. Then the kinetic energy of a multi-body system can be calculated by

$$\frac{1}{2} K_q(\dot{q}, \dot{q}) = \frac{1}{2} \sum_{i=1}^{N} \| \, {}^i\tau_i^0(q, \tau) \, \|_{h_{\mathfrak{e},i}}^2, \tag{5.41}$$

where h_i denotes the left invariant metric corresponding to the body B_i and $h_{\mathfrak{e},i}$ is its restriction to $se(3)$, and $\| \cdot \|_{h_{\mathfrak{e},i}}$ refers to its induced norm on $se(3)$. In the second approach AP2, first the case of a multi-body system with only three bodies and two joints is investigated in the sequel, and the result is generalized for the case of N bodies.

Let $\mathcal{G}_1 = \mathcal{Q}_1$ and $\mathcal{G}_2 \subseteq \mathcal{Q}_2$ be a Lie subgroup of $\mathcal{Q}_2$, and consider the action of $\mathcal{G}_1 \times \mathcal{G}_2$ by left translation on the configuration manifold $\mathcal{Q} = \mathcal{Q}_1 \times \mathcal{Q}_2$, i.e., $\forall (\mathfrak{g}_1, \mathfrak{g}_2) \in \mathcal{G}_1 \times \mathcal{G}_2$ we have $(q_1, q_2) \mapsto (\mathfrak{g}_1 q_1, \mathfrak{g}_2 q_2)$ for all $q = (q_1, q_2) \in \mathcal{Q}$. It is easy to show that under this action the kinetic energy of the system becomes

$$\frac{1}{2} K_{(\mathfrak{g}_1 q_1, \mathfrak{g}_2 q_2)}(\mathfrak{g}_1 \dot{q}_1, \mathfrak{g}_2 \dot{q}_2) = \frac{1}{2} \left(\| \, \mathrm{Ad}_{r_{cm,1}^{-1}} \tau_1 \, \|_{h_{\mathfrak{e},1}}^2 + \| \, \mathrm{Ad}_{r_{cm,2}^{-1}} \left(\mathrm{Ad}_{(\mathfrak{g}_2 q_2)^{-1}} \tau_1 + \tau_2 \right) \|_{h_{\mathfrak{e},2}}^2 \right),$$

where $(\mathfrak{g}_1 \dot{q}_1, \mathfrak{g}_2 \dot{q}_2)$ denotes the left translation of the velocity vector $(\dot{q}_1, \dot{q}_2)$ to $(\mathfrak{g}_1 q_1, \mathfrak{g}_2 q_2)$. As it was expected, the kinetic energy remains invariant under the

$\mathcal{G}_1$-action. We define the metric $h_2' := \mathrm{Ad}^*_{r_{cm,2}^{-1}}(h_{\mathfrak{e},2})$ on $se(3)$ corresponding to the body B_2. Kinetic energy is invariant under the action of $\mathcal{G}_1 \times \mathcal{G}_2$ if and only if it is invariant under the infinitesimal action of all elements $\varpi \in Lie(\mathcal{G}_2)$ at the identity element $\mathfrak{e}_2 \in \mathcal{G}_2$. Hence, we have the following necessary and sufficient condition for the metric K to be invariant under the action of $\mathcal{G}_1 \times \mathcal{G}_2$ by left translation:

$$\left.\frac{\partial}{\partial \epsilon}\right|_{\epsilon=0} \left(\frac{1}{2} \parallel \mathrm{Ad}_{(\exp(-\epsilon\varpi)q_2)^{-1}} \tau_1 + \tau_2 \parallel^2_{h_2'} \right) = h_2'(\mathrm{Ad}_{q_2^{-1}} \mathrm{ad}_\varpi(\tau_1), \mathrm{Ad}_{q_2^{-1}} \tau_1 + \tau_2) = 0. \tag{5.42}$$

$\forall q_2 \in \mathcal{Q}_2, \quad \forall \tau_1 \in Lie(\mathcal{Q}_1) \;\text{ and }\; \forall \tau_2 \in Lie(\mathcal{Q}_2)$

The largest Lie sub-algebra of $Lie(\mathcal{Q}_2)$ whose elements satisfy the above condition is the Lie algebra of $\mathcal{G}_2$, and $\mathcal{G}_2$ can be identified by integrating this Lie sub-algebra on $\mathcal{Q}_2$. Noteworthy examples of the systems that admit such a symmetry group are any two commutative joints, a planar cart with a rotary joint orthogonal to it, and a planar cart moving on a rotating disc. With similar calculations, we can extend this result to the case of open-chain multi-body systems with $N+1$ bodies, and write the necessary and sufficient condition (5.42) as

$$\sum_{\mathrm{i}=2}^{N} h_{\mathrm{i}}'(\mathrm{Ad}_{(q_2\cdots q_{\mathrm{i}})^{-1}} \mathrm{ad}_\varpi(\tau_1), \mathrm{Ad}_{(q_2\cdots q_{\mathrm{i}})^{-1}}(\tau_1 + \cdots + \mathrm{Ad}_{(q_2\cdots q_{\mathrm{i}})} \tau_{\mathrm{i}})) = 0. \tag{5.43}$$

$\forall q_{\mathrm{i}} \in \mathcal{Q}_{\mathrm{i}} \;\; (\mathrm{i} = 2, \cdots, N) \;\text{ and }\; \forall \tau_i \in Lie(\mathcal{Q}_i) \;\; (i = 1, \cdots, N)$

where $h_{\mathrm{i}}' := \mathrm{Ad}^*_{r_{cm,\mathrm{i}}^{-1}}(h_{\mathfrak{e},\mathrm{i}})$. Note that, the expression in the parentheses in the second argument of h_{i}' is the relative twist of B_{i} with respect to B_0 and expressed in a coordinate frame attached to B_1. Based on this condition, we may derive a sufficient condition for the metric K being invariant under the action of $\mathcal{G}_1 \times \mathcal{G}_2$ by left translation.

Proposition 56. *For an open-chain multi-body system, the metric K is invariant under the action of $\mathcal{G}_1 \times \mathcal{G}_2$, as defined above, by left translation, if $\forall \varpi \in Lie(\mathcal{G}_2)$ and $\forall \tau_1 \in Lie(\mathcal{Q}_1)$ we have*

$$ad_\varpi(\tau_1) = 0.$$

Similarly, we can derive sufficient conditions for the metric K being invariant under the action of a group in the form of $\mathcal{G}_1 \times \cdots \times \mathcal{G}_N$ by left translation. Here $\mathcal{G}_{\mathrm{i}} \subseteq \mathcal{Q}_{\mathrm{i}}$ is a Lie subgroup of $\mathcal{Q}_{\mathrm{i}}$ for $\mathrm{i} = 2, \cdots, N$. However, since it is very unlikely that we have the invariance of K under the action of such a big group, we do not go through the calculations for this most general case.

Finally, suppose that B_{i_0} is an extremity of the open-chain multi-body system. Consider the action of $\mathcal{G}_{i_0}$ as a Lie subgroup of $\mathcal{Q}_{i_0}$ by right translation. The kinetic energy of the system after the action of an element $\mathfrak{g}_{i_0} \in \mathcal{G}_{i_0}$ becomes

$$\frac{1}{2} K_{q\mathfrak{g}_{i_0}}(\dot{q}\mathfrak{g}_{i_0}, \dot{q}\mathfrak{g}_{i_0}) = \frac{1}{2} \sum_{\substack{i=1 \\ i \neq i_0}}^{N} \parallel {}^i\tau_i^0 \parallel^2_{h_i} + \frac{1}{2} \parallel \mathrm{Ad}_{\mathfrak{g}_{i_0}^{-1}} \mathrm{Ad}_{r_{cm,i_0}} {}^{i_0}\tau_{i_0}^0 \parallel^2_{h_{i_0}'} . \tag{5.44}$$

The kinetic energy metric is invariant under this action if and only if it is invariant under the infinitesimal action of any element $\varrho \in Lie(\mathcal{G}_{i_0})$ at the identity element.

$$\frac{\partial}{\partial \epsilon}\bigg|_{\epsilon=0} \left(\frac{1}{2} \parallel \mathrm{Ad}_{(\exp(-\epsilon\varrho))^{-1}} (\mathrm{Ad}_{r_{cm,i_0}} {}^{i_0}\tau^0_{i_0}) \parallel^2_{h'_{i_0}} \right) \tag{5.45}$$

$$= h'_{i_0}(\mathrm{ad}_\varrho(\mathrm{Ad}_{r_{cm,i_0}} {}^{i_0}\tau^0_{i_0}), \mathrm{Ad}_{r_{cm,i_0}} {}^{i_0}\tau^0_{i_0}) = 0, \tag{5.46}$$

for all ${}^{i_0}\tau^0_{i_0}$, i.e., all admissible relative twists of B_{i_0} with respect to the inertial coordinate frame and expressed in the same frame. The largest Lie sub-algebra of $Lie(\mathcal{Q}_{i_0})$ that satisfies the above condition is $Lie(\mathcal{G}_{i_0})$, and $\mathcal{G}_{i_0} \subseteq \mathcal{Q}_{i_0}$ is identified by integrating this Lie sub-algebra on $\mathcal{Q}_{i_0}$. Therefore, the kinetic energy K is invariant under the $\mathcal{G}_{i_0}$-action by right translation on $\mathcal{Q}_{i_0}$ if and only if we have the above condition.

5.2 Further Reduction of Holonomic Open-chain Multi-body Systems

Let $\mathcal{N} = \mathcal{G}_2 \times \cdots \mathcal{G}_N$ be a Lie subgroup of $\overline{\mathcal{Q}} = \mathcal{Q}_2 \times \cdots \times \mathcal{Q}_N$, i.e., $\mathcal{G}_{\mathfrak{i}}$ is a Lie subgroup of $\mathcal{Q}_{\mathfrak{i}}$ for $\mathfrak{i} = 2, \cdots, N$. We define the action of $\mathcal{N}$ on $\widetilde{\mathcal{Q}}$, i.e., $\widetilde{\Phi}_{\mathfrak{n}} \colon \widetilde{\mathcal{Q}} \to \widetilde{\mathcal{Q}}$, by left translation on $\overline{\mathcal{Q}}$. For any element $\mathfrak{n} = (\mathfrak{n}_2, \cdots, \mathfrak{n}_N) \in \mathcal{N}$ we have

$$\widetilde{\Phi}_{\mathfrak{n}}(\widetilde{q}_1, \overline{q}) = (\widetilde{q}_1, \mathfrak{n}_2 q_2, \cdots, \mathfrak{n}_N q_N).$$

Hence, the tangent and cotangent lift of the $\mathcal{N}$-action are

$$T_{\widetilde{q}}\widetilde{\Phi}_{\mathfrak{n}}(\widetilde{v}_{\widetilde{q}}) = \begin{bmatrix} id_{T_{\widetilde{q}_1}\widetilde{\mathcal{Q}}_1} & 0 & \cdots & 0 \\ 0 & T_{q_2}L_{\mathfrak{n}_2} & \cdots & 0 \\ \vdots & \vdots & \ddots & \vdots \\ 0 & 0 & \cdots & T_{q_N}L_{\mathfrak{n}_N} \end{bmatrix} \begin{bmatrix} \widetilde{v}_1 \\ v_2 \\ \vdots \\ v_N \end{bmatrix}$$

$$T^*_{\widetilde{\Phi}_{\mathfrak{n}}(\widetilde{q})}\widetilde{\Phi}_{\mathfrak{n}^{-1}}(\widetilde{p}_{\widetilde{q}}) = \begin{bmatrix} id_{T_{\widetilde{q}_1}\widetilde{\mathcal{Q}}_1} & 0 & \cdots & 0 \\ 0 & T^*_{\mathfrak{n}_2 q_2}L_{\mathfrak{n}_2^{-1}} & \cdots & 0 \\ \vdots & \vdots & \ddots & \vdots \\ 0 & 0 & \cdots & T^*_{\mathfrak{n}_N q_N}L_{\mathfrak{n}_N^{-1}} \end{bmatrix} \begin{bmatrix} \widetilde{p}_1 \\ \widetilde{p}_2 \\ \vdots \\ \widetilde{p}_N \end{bmatrix}.$$

Let us assume that the Hamiltonian $\widetilde{H}$ and the metric $\widetilde{K}$ of a reduced holonomic open-chain multi-body system $(T^*\widetilde{\mathcal{Q}}, \widetilde{\Omega}_{can} - \Xi_\mu, \widetilde{H}, \widetilde{K})$ are invariant under the cotangent and tangent lift of the $\mathcal{N}$-action, respectively. We also have that for all $\zeta \in Lie(\mathcal{N})$ the infinitesimal generator of the cotangent lifted action $\zeta_{T^*\widetilde{\mathcal{Q}}}$ satisfies the following conditions:

$$\iota_{\zeta_{T^*\widetilde{\mathcal{Q}}}}\Xi_\mu = 0,$$
$$\mathcal{L}_{\zeta_{T^*\widetilde{\mathcal{Q}}}}\Xi_\mu = 0,$$

which indicate that the 2-form Ξ_μ is basic with respect to the $\mathcal{N}$-action.

The map corresponding to the infinitesimal $\mathcal{N}$-action $\widetilde{\phi}_{\widetilde{q}}\colon Lie(\mathcal{N}) \subset Lie(\overline{\mathcal{Q}}) \to T\widetilde{\mathcal{Q}}$ is calculated by

$$\widetilde{\phi}_{\widetilde{q}} = \begin{bmatrix} 0 & \cdots & 0 \\ T_{e_2}(R_{q_2} \circ \widetilde{\iota}_2) & \cdots & 0 \\ \vdots & \ddots & \vdots \\ 0 & \cdots & T_{e_N}(R_{q_N} \circ \widetilde{\iota}_N) \end{bmatrix},$$

where $\widetilde{\iota}_{\mathrm{i}}\colon \mathcal{G}_{\mathrm{i}} \hookrightarrow \mathcal{Q}_{\mathrm{i}}$ is the canonical inclusion map for $\mathrm{i} = 2, \cdots, N$. As the result, we define the momentum map $\widetilde{\mathbf{M}}_{\widetilde{q}}\colon T^*_{\widetilde{q}}\widetilde{\mathcal{Q}} \to Lie^*(\mathcal{N})$ by

$$\widetilde{\mathbf{M}}_{\widetilde{q}} = \widetilde{\phi}^*_{\widetilde{q}} = \begin{bmatrix} 0 & T^*_{e_2}(R_{q_2} \circ \widetilde{\iota}_2) & \cdots & 0 \\ \vdots & \vdots & \ddots & \vdots \\ 0 & 0 & \cdots & T^*_{e_N}(R_{q_N} \circ \widetilde{\iota}_N) \end{bmatrix}.$$

Now, we have the locked inertia tensor $\widetilde{\mathbb{I}}_{\widetilde{q}}\colon Lie(\mathcal{N}) \to Lie^*(\mathcal{N})$ and the mechanical connection corresponding to the $\mathcal{N}$-action $\widetilde{\mathcal{A}}_{\widetilde{q}}\colon T_{\widetilde{q}}\widetilde{\mathcal{Q}} \to Lie(\mathcal{N})$ calculated by

$$\begin{aligned} \widetilde{\mathbb{I}}_{\widetilde{q}} &= \widetilde{\phi}^*_{\widetilde{q}} \circ \mathbb{F}\widetilde{L}_{\widetilde{q}} \circ \widetilde{\phi}_{\widetilde{q}}, \\ \widetilde{\mathcal{A}}_{\widetilde{q}} &= \widetilde{\mathbb{I}}^{-1}_{\widetilde{q}} \circ \widetilde{\mathbf{M}}_{\widetilde{q}} \circ \mathbb{F}\widetilde{L}_{\widetilde{q}}, \end{aligned}$$

where, $\mathbb{F}\widetilde{L}_{\widetilde{q}}\colon T_{\widetilde{q}}\widetilde{\mathcal{Q}} \to T^*_{\widetilde{q}}\widetilde{\mathcal{Q}}$ is the Legendre transformation induced by the metric $\widetilde{K}$:

$$\langle \mathbb{F}\widetilde{L}_{\widetilde{q}}(\widetilde{v}_{\widetilde{q}}), \widetilde{w}_{\widetilde{q}} \rangle := \widetilde{K}_{\widetilde{q}}(\widetilde{v}_{\widetilde{q}}, \widetilde{w}_{\widetilde{q}}). \quad \forall \widetilde{v}_{\widetilde{q}}, \widetilde{w}_{\widetilde{q}} \in T_{\widetilde{q}}\widetilde{\mathcal{Q}}$$

We use the local trivialization introduced in the previous section to locally trivialize the principal bundle $\widetilde{\mathcal{Q}} \to \widetilde{\mathcal{Q}}/\mathcal{N}$, and find the principal connection $\widetilde{\mathcal{A}}_{\widetilde{q}}\colon T_{\widetilde{q}}\widetilde{\mathcal{Q}} \to Lie(\mathcal{N})$ in the form of (5.29). We may also locally trivialize the principal bundle $\mathcal{N} \to \mathcal{N}/\mathcal{N}_\vartheta$, where $\mathcal{N}_\vartheta$ is the isotropy group of $\mathcal{N}$ for $\vartheta \in Lie^*(\mathcal{N})$, and calculate the mechanical connection $\widetilde{\mathcal{A}}^\vartheta_{\widetilde{q}}\colon T_{\widetilde{q}}\widetilde{\mathcal{Q}} \to Lie(\mathcal{N}_\vartheta)$ corresponding to the principal bundle $\widehat{\pi}\colon \widetilde{\mathcal{Q}} \to \widehat{\mathcal{Q}} := \widetilde{\mathcal{Q}}/\mathcal{N}_\vartheta$ using (5.29). Then we calculate the Hamiltonian $\widehat{H}\colon T^*\widehat{\mathcal{Q}} \to \mathbb{R}$ by the equality

$$\widehat{H} := \widetilde{H}_\vartheta \circ \varphi_\vartheta^{-1}, \tag{5.47}$$

where $\widetilde{H}_\vartheta\colon \widetilde{\mathbf{M}}^{-1}(\vartheta)/\mathcal{N}_\vartheta \to \mathbb{R}$ is the induced Hamiltonian on the reduced phase space defined in (2.9), and $\widetilde{\varphi}_\vartheta\colon \widetilde{\mathbf{M}}^{-1}(\vartheta)/\mathcal{N}_\vartheta \to [T\widehat{\pi}\widetilde{\mathcal{V}}]^0 \subseteq T^*\widehat{\mathcal{Q}}$ is defined in Lemma 53. Here, $\widetilde{\mathcal{V}} \subset T\widetilde{\mathcal{Q}}$ is the vertical vector sub-bundle for the principal bundle $\widetilde{\mathcal{Q}} \to \widetilde{\mathcal{Q}}/\mathcal{N}$. Plus, $\widetilde{\mathcal{H}} \subset T\widetilde{\mathcal{Q}}$ is the corresponding horizontal vector sub-bundle of this principal bundle.

Finally, we are ready to report the main result of this section in the following theorem, by repeating the reduction procedure detailed in the previous section.

Theorem 57. *Let $\vartheta \in Lie^*(\mathcal{N})$ be a regular value of the momentum map $\widetilde{\boldsymbol{M}}$. Under the above-mentioned assumptions, a reduced holonomic open-chain multi-body system with symmetry $(T^*\widetilde{\mathcal{Q}}, \widetilde{\Omega}_{can} - \Xi_\mu, \widetilde{H}, \widetilde{K}, \mathcal{N})$ can be further reduced to a mechanical system $([T\widehat{\pi}\widetilde{\mathcal{V}}]^0 \subseteq T^*\widehat{\mathcal{Q}}, \widehat{\Omega}_{can} - \widehat{\Xi}_\mu - \Xi_\vartheta, \widehat{H}, \widehat{K})$, in the sense that*

was introduced in Theorem 54. Here, $\widehat{\Omega}_{can}$ is the canonical 2-form on $T^*\widehat{\mathcal{Q}}$, $\widehat{H}$ is defined by (5.47) and $\widehat{K}$ is a metric on $\widehat{\mathcal{Q}}$ such that $\forall \widehat{u}_{\widehat{q}}, \widehat{w}_{\widehat{q}} \in T_{\widehat{q}}\widehat{\mathcal{Q}}$ we have

$$\widehat{K}_{\widehat{q}}(\widehat{u}_{\widehat{q}}, \widehat{w}_{\widehat{q}}) = \widetilde{K}_{\widetilde{q}}(\widehat{\mathrm{hl}}_{\widetilde{q}}(\widehat{u}_{\widehat{q}}), \widehat{\mathrm{hl}}_{\widetilde{q}}(\widehat{w}_{\widehat{q}})),$$

where $\widehat{q} := \widehat{\pi}(\widetilde{q})$, and $\widehat{\mathrm{hl}}_{\widetilde{q}} \colon T_{\widetilde{q}}\widehat{\mathcal{Q}} \to \widetilde{\mathcal{H}}_{\widetilde{q}}$ is the horizontal lift map for the principal bundle $\widehat{\pi} \colon \widetilde{\mathcal{Q}} \to \widehat{\mathcal{Q}}$. The 2-form $\Xi_\vartheta \in \Omega^2(T^*\widehat{\mathcal{Q}})$ is calculated in the local coordinates by (5.37). Plus, the basic 2-form $\Xi_\mu \in \Omega^2(T^*\widetilde{\mathcal{Q}})$ (with respect to the $\mathcal{N}$-action) is projected to the 2-form $\widehat{\Xi}_\mu \in \Omega^2(T^*\widehat{\mathcal{Q}})$.

Finally, in local coordinates we have $\widehat{X} = (\dot{\widehat{q}}, \dot{\widehat{p}})$ as a vector field on $[T\widehat{\pi}(\widetilde{\mathcal{V}})]^0$. Hamilton's equation in the vector sub-bundle $[T\widehat{\pi}(\widetilde{\mathcal{V}})]^0$ of the cotangent bundle of ϑ-shape space reads

$$\iota_{(\dot{\widehat{q}}, \dot{\widehat{p}})}(-d\widehat{p} \wedge d\widehat{q} - \widehat{\Xi}_\mu - \Xi_\vartheta) = \frac{\partial \widehat{H}}{\partial \widehat{p}} d\widehat{p} + \frac{\partial \widehat{H}}{\partial \widehat{q}} d\widehat{q}.$$

6 Case Study

In this section we study the dynamics of an example of a holonomic open-chain multi-body system. We derive the reduced dynamical equations of a six-d.o.f. manipulator mounted on top of a spacecraft whose initial configuration is shown in Figure 1.

Using the indexing introduced in the previous section and starting with the spacecraft as B_1, we first number the bodies and joints. The following graph shows the topology of the holonomic open-chain multi-body system.

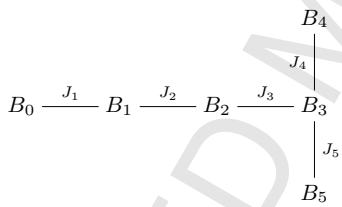

We then identify the relative configuration manifolds corresponding to the joints of the robotic system. The relative pose of B_1 with respect to the inertial coordinate frame is identified by the elements of the Special Euclidean group $SE(3)$. We identify the elements of the relative configuration manifold corresponding to the first joint, which is a six-d.o.f. free joint, by

$$Q_1^0 = \left\{ r_1^0 = \begin{bmatrix} R_Y(\theta_Y)R_X(\theta_X)R_Z(\theta_Z) & \begin{bmatrix} x \\ y \\ z \end{bmatrix} \\ \begin{bmatrix} 0 & 0 & 0 \end{bmatrix} & 1 \end{bmatrix} \middle| \, x, y, z \in \mathbb{R}, \theta_X, \theta_Y, \theta_Z \in \mathbb{S}^1 \right\},$$

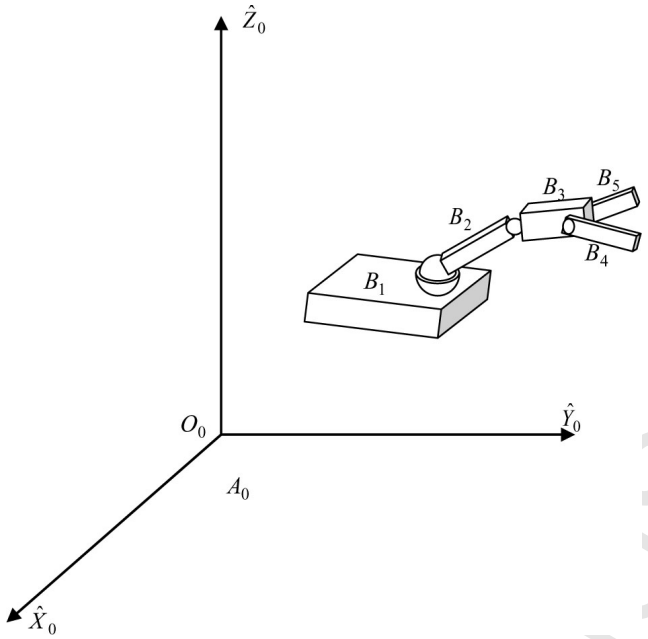

Fig. 1 A six-d.o.f. manipulator mounted on a spacecraft

where we have

$$R_X(\theta_X) = \begin{bmatrix} 1 & 0 & 0 \\ 0 & \cos(\theta_X) & -\sin(\theta_X) \\ 0 & \sin(\theta_X) & \cos(\theta_X) \end{bmatrix},$$
$$R_Y(\theta_Y) = \begin{bmatrix} \cos(\theta_Y) & 0 & \sin(\theta_Y) \\ 0 & 1 & 0 \\ -\sin(\theta_Y) & 0 & \cos(\theta_Y) \end{bmatrix},$$
$$R_Z(\theta_Z) = \begin{bmatrix} \cos(\theta_Z) & -\sin(\theta_Z) & 0 \\ \sin(\theta_Z) & \cos(\theta_Z) & 0 \\ 0 & 0 & 1 \end{bmatrix}.$$

The second joint is a three-d.o.f. spherical joint between B_2 and B_1, and its corresponding relative configuration manifold is given by

$$Q_2^1 = \left\{ r_2^1 = \begin{bmatrix} R_X(\psi_X)R_Y(\psi_Y)R_Z(\psi_Z) & \begin{bmatrix} 0 \\ l_1 \\ 0 \end{bmatrix} \\ \begin{bmatrix} 0 & 0 & 0 \end{bmatrix} & 1 \end{bmatrix} \middle| \psi_X, \psi_Y, \psi_Z \in \mathbb{S}^1 \right\}.$$

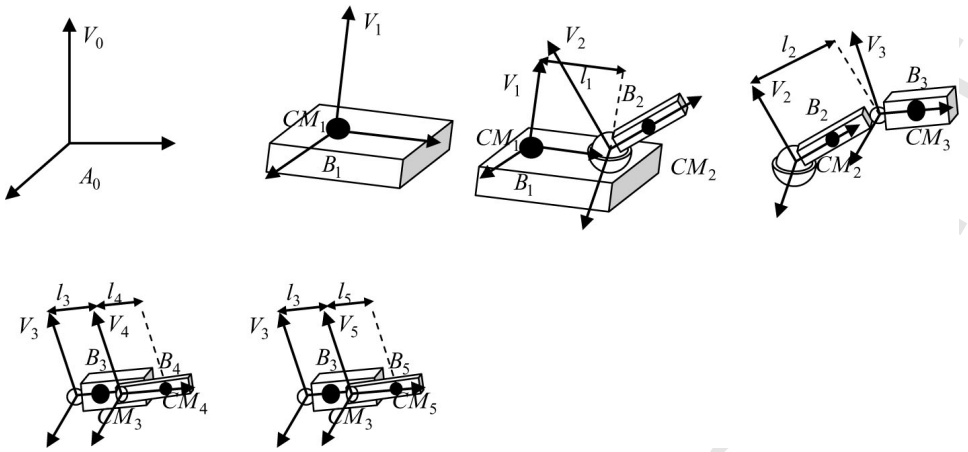

Fig. 2 The coordinate frames attached to the bodies of the robot

The third joint is a one-d.o.f. revolute joint between B_3 and B_2, and its relative configuration manifolds is

$$Q_3^2 = \left\{ r_3^2 = \begin{bmatrix} 1 & 0 & 0 & 0 \\ 0 & \cos(\psi_1) & -\sin(\psi_1) & l_2 \\ 0 & \sin(\psi_1) & \cos(\psi_1) & 0 \\ 0 & 0 & 0 & 1 \end{bmatrix} \in SE(3) \,\middle|\, \psi_1 \in \mathbb{S}^1 \right\}.$$

The forth and fifth joints are one-d.o.f. revolute joints whose axes of revolution are assumed to be the X_i-axis ($i = 4, 5$). The relative configuration manifolds of these joints are identified by

$$Q_4^3 = \left\{ r_4^3 = \begin{bmatrix} 1 & 0 & 0 & c \\ 0 & \cos(\psi_2) & -\sin(\psi_2) & l_3 \\ 0 & \sin(\psi_2) & \cos(\psi_2) & 0 \\ 0 & 0 & 0 & 1 \end{bmatrix} \in SE(3) \,\middle|\, \psi_2 \in \mathbb{S}^1 \right\},$$

$$Q_5^3 = \left\{ r_5^3 = \begin{bmatrix} 1 & 0 & 0 & -c \\ 0 & \cos(\psi_3) & -\sin(\psi_3) & l_3 \\ 0 & \sin(\psi_3) & \cos(\psi_3) & 0 \\ 0 & 0 & 0 & 1 \end{bmatrix} \in SE(3) \,\middle|\, \psi_3 \in \mathbb{S}^1 \right\}.$$

Here, $l_1, \cdots, l_5$ are defined in Figure 2, and the distance between J_4 and J_5 is assumed to be $2c$.

We assume that the initial pose of B_1 with respect to the inertial coordinate frame $r_{1,0}^0$ is the identity element of $SE(3)$. We have located the coordinate frame attached to B_1 on its centre of mass. Hence, in matrix form we have $r_{1,0}^0 = r_{cm,1} = id_4$, where id_4 is the 4×4 identity matrix. For the second body, the initial relative pose with respect to B_1 is

$$r_{2,0}^1 = \begin{bmatrix} 1 & 0 & 0 & 0 \\ 0 & 1 & 0 & l_1 \\ 0 & 0 & 1 & 0 \\ 0 & 0 & 0 & 1 \end{bmatrix},$$

and we have

$$r_{cm,2} = \begin{bmatrix} 1 & 0 & 0 & 0 \\ 0 & 1 & 0 & l_1 + l_2/2 \\ 0 & 0 & 1 & 0 \\ 0 & 0 & 0 & 1 \end{bmatrix}.$$

The initial relative pose of B_3 with respect to B_2 is

$$r^2_{3,0} = \begin{bmatrix} 1 & 0 & 0 & 0 \\ 0 & 1 & 0 & l_2 \\ 0 & 0 & 1 & 0 \\ 0 & 0 & 0 & 1 \end{bmatrix},$$

and the relative pose of the centre of mass of B_3 with respect to the inertial coordinate frame is

$$r_{cm,3} = \begin{bmatrix} 1 & 0 & 0 & 0 \\ 0 & 1 & 0 & l_1 + l_2 + l_3/2 \\ 0 & 0 & 1 & 0 \\ 0 & 0 & 0 & 1 \end{bmatrix}.$$

Here we have assumed that the centre of mass of B_2 and B_3 are in the middle of the links. For the forth and fifth bodies we have ($i = 4, 5$)

$$r^3_{i,0} = \begin{bmatrix} 1 & 0 & 0 & \pm c \\ 0 & 1 & 0 & l_3 \\ 0 & 0 & 1 & 0 \\ 0 & 0 & 0 & 1 \end{bmatrix},$$

$$r_{cm,4} = \begin{bmatrix} 1 & 0 & 0 & c \\ 0 & 1 & 0 & l_1 + l_2 + l_3 + l_4 \\ 0 & 0 & 1 & 0 \\ 0 & 0 & 0 & 1 \end{bmatrix}, r_{cm,5} = \begin{bmatrix} 1 & 0 & 0 & -c \\ 0 & 1 & 0 & l_1 + l_2 + l_3 + l_5 \\ 0 & 0 & 1 & 0 \\ 0 & 0 & 0 & 1 \end{bmatrix},$$

where the plus and minus signs correspond to the body B_4 and B_5, respectively.

With the above specifications of the system we identify the configuration manifold of the holonomic open-chain multi-body system in this case study by

$\mathcal{Q} = \mathcal{Q}_1 \times \cdots \times \mathcal{Q}_5$, where

$$\mathcal{Q}_1 = \left\{ q_1 = \begin{bmatrix} R_Y(\theta_Y)R_X(\theta_X)R_Z(\theta_Z) & \begin{bmatrix} x \\ y \\ z \end{bmatrix} \\ \begin{bmatrix} 0 & 0 & 0 \end{bmatrix} & 1 \end{bmatrix} \in SE(3) \right\},$$

$$\mathcal{Q}_2 = \left\{ q_2 = \begin{bmatrix} R & \begin{bmatrix} 0 \\ l_1 \\ 0 \end{bmatrix} - R \begin{bmatrix} 0 \\ l_1 \\ 0 \end{bmatrix} \\ \begin{bmatrix} 0 & 0 & 0 \end{bmatrix} & 1 \end{bmatrix} \in SE(3) \,\middle|\, R = R_X(\psi_X)R_Y(\psi_Y)R_Z(\psi_Z) \right\},$$

$$\mathcal{Q}_3 = \left\{ q_3 = \begin{bmatrix} 1 & 0 & 0 & 0 \\ 0 & \cos(\psi_1) & -\sin(\psi_1) & 2(l_1+l_2)\sin^2(\psi_1/2) \\ 0 & \sin(\psi_1) & \cos(\psi_1) & -(l_1+l_2)\sin(\psi_1) \\ 0 & 0 & 0 & 1 \end{bmatrix} \in SE(3) \right\},$$

$$\mathcal{Q}_4 = \left\{ q_4 = \begin{bmatrix} 1 & 0 & 0 & \\ 0 & \cos(\psi_2) & -\sin(\psi_2) & 2(l_1+l_2+l_3)\sin^2(\psi_2/2) \\ 0 & \sin(\psi_2) & \cos(\psi_2) & -(l_1+l_2+l_3)\sin(\psi_2) \\ 0 & 0 & 0 & 1 \end{bmatrix} \in SE(3) \right\},$$

$$\mathcal{Q}_5 = \left\{ q_5 = \begin{bmatrix} 1 & 0 & 0 & 0 \\ 0 & \cos(\psi_3) & -\sin(\psi_3) & 2(l_1+l_2+l_3)\sin^2(\psi_3/2) \\ 0 & \sin(\psi_3) & \cos(\psi_3) & -(l_1+l_2+l_3)\sin(\psi_3) \\ 0 & 0 & 0 & 1 \end{bmatrix} \in SE(3) \right\}.$$

In order to calculate the kinetic energy for the system under study, we need to first form the function $F\colon \mathcal{Q} \to \mathcal{P} = \overbrace{SE(3) \times \cdots \times SE(3)}^{5-times}$, which determines the pose of the coordinate frames attached to the centres of mass of the bodies with respect to the inertial coordinate frame.

$$F(q_1, \cdots, q_5) = (q_1 r_{cm,1}, q_1 q_2 r_{cm,2}, q_1 q_2 q_3 r_{cm,3}, q_1 q_2 q_3 q_4 r_{cm,4}, q_1 q_2 q_3 q_5 r_{cm,5})$$

Using (4.23), we can calculate the kinetic energy metric for the open-chain multi-body system. In matrix form we have the following equation for the tangent map $T_q(L_{F(q)^{-1}}F)\colon T_q\mathcal{Q} \to Lie(\mathcal{P})$

$$T_q(L_{F(q)^{-1}}F) = \begin{bmatrix} \mathrm{Ad}_{r_{cm,1}^{-1}} & \cdots & 0 \\ \vdots & \ddots & \vdots \\ 0 & \cdots & \mathrm{Ad}_{r_{cm,5}^{-1}} \end{bmatrix} \mathcal{J}_q \begin{bmatrix} T_{q_1}(L_{q_1^{-1}} \circ \iota_1) & \cdots & 0 \\ \vdots & \ddots & \vdots \\ 0 & \cdots & T_{q_5}(L_{q_5^{-1}} \circ \iota_5) \end{bmatrix},$$

where we have

$$\mathcal{J}_q = \begin{bmatrix} id_6 & 0_{6\times6} & 0_{6\times6} & 0_{6\times6} & 0_{6\times6} \\ \mathrm{Ad}_{q_2^{-1}} & id_6 & 0_{6\times6} & 0_{6\times6} & 0_{6\times6} \\ \mathrm{Ad}_{(q_2q_3)^{-1}} & \mathrm{Ad}_{q_3^{-1}} & id_6 & 0_{6\times6} & 0_{6\times6} \\ \mathrm{Ad}_{(q_2q_3q_4)^{-1}} & \mathrm{Ad}_{(q_3q_4)^{-1}} & \mathrm{Ad}_{q_4^{-1}} & id_6 & 0_{6\times6} \\ \mathrm{Ad}_{(q_2q_3q_5)^{-1}} & \mathrm{Ad}_{(q_3q_5)^{-1}} & \mathrm{Ad}_{q_5^{-1}} & 0_{6\times6} & id_6 \end{bmatrix},$$

and where id_6 is the 6×6 identity matrix. Let us denote the standard basis for $se(3)$ by $\{E_1, \cdots, E_6\}$, such that

$$E_1 = \begin{bmatrix} 0&0&0&1\\ 0&0&0&0\\ 0&0&0&0\\ 0&0&0&0 \end{bmatrix}, E_2 = \begin{bmatrix} 0&0&0&0\\ 0&0&0&1\\ 0&0&0&0\\ 0&0&0&0 \end{bmatrix}, E_3 = \begin{bmatrix} 0&0&0&0\\ 0&0&0&0\\ 0&0&0&1\\ 0&0&0&0 \end{bmatrix}$$

$$E_4 = \begin{bmatrix} 0&0&0&0\\ 0&0&-1&0\\ 0&1&0&0\\ 0&0&0&0 \end{bmatrix}, E_5 = \begin{bmatrix} 0&0&1&0\\ 0&0&0&0\\ -1&0&0&0\\ 0&0&0&0 \end{bmatrix}, E_6 = \begin{bmatrix} 0&-1&0&0\\ 1&0&0&0\\ 0&0&0&0\\ 0&0&0&0 \end{bmatrix}$$

Using the introduced joint parameters, we have the following equalities:

$$T_{q_1}(L_{q_1^{-1}} \circ \iota_1) = \begin{bmatrix} R_Z^{-1}(\theta_Z)R_X^{-1}(\theta_X)R_Y^{-1}(\theta_Y) & 0_{3\times 3} \\ 0_{3\times 3} & \begin{bmatrix} \cos(\theta_Z) & \cos(\theta_X)\sin(\theta_Z) & 0 \\ -\sin(\theta_Z) & \cos(\theta_X)\cos(\theta_Z) & 0 \\ 0 & -\sin(\theta_X) & 1 \end{bmatrix} \end{bmatrix},$$

$$T_{q_2}(L_{q_2^{-1}} \circ \iota_2) = \begin{bmatrix} -l_1\sin(\psi_Y) & 0 & -l_1 \\ 0 & 0 & 0 \\ l_1\cos(\psi_Y)\cos(\psi_Z) & -l_1\sin(\psi_Z) & 0 \\ -\cos(\psi_Y)\cos(\psi_Z) & \sin(\psi_Z) & 0 \\ \cos(\psi_Y)\sin(\psi_Z) & \cos(\psi_Z) & 0 \\ -\sin(\psi_Y) & 0 & 1 \end{bmatrix},$$

$$T_{q_3}(L_{q_3^{-1}} \circ \iota_3) = \begin{bmatrix} 0 & 0 & l_1 + l_2 & 1 & 0 & 0 \end{bmatrix}^T,$$

$$T_{q_4}(L_{q_4^{-1}} \circ \iota_4) = \begin{bmatrix} 0 & 0 & l_1 + l_2 + l_3 & 1 & 0 & 0 \end{bmatrix}^T$$

$$T_{q_5}(L_{q_5^{-1}} \circ \iota_5) = \begin{bmatrix} 0 & 0 & l_1 + l_2 + l_3 & 1 & 0 & 0 \end{bmatrix}^T.$$

Note that, $\forall r_0 \in SE(3)$ that is in the following form ($R_0 \in SO(3)$ and $p_0 = [p_{0,1}, p_{0,2}, p_{0,3}]^T \in \mathbb{R}^3$)

$$r_0 = \begin{bmatrix} R_0 & p_0 \\ 0_{1\times 3} & 1 \end{bmatrix},$$

we calculate the Ad_{r_0} operator by

$$\mathrm{Ad}_{r_0} = \begin{bmatrix} R_0 & \widetilde{p}_0 R_0 \\ 0_{3\times 3} & R_0 \end{bmatrix},$$

where

$$\widetilde{p}_0 = \begin{bmatrix} 0 & -p_{0,3} & p_{0,2} \\ p_{0,3} & 0 & -p_{0,1} \\ -p_{0,2} & p_{0,1} & 0 \end{bmatrix}$$

is a skew-symmetric matrix. We choose the standard basis $\{E_1, \cdots, E_6\}$ for $se(3)$. For this case study, the left-invariant metric $h = h_1 \oplus \cdots \oplus h_6$ on $\mathcal{P}$ is identified, in the above basis, by the following metrics on the Lie algebras of copies of $SE(3)$ corresponding to the bodies:

$$h_{\mathfrak{e},i} = \begin{bmatrix} m_i id_3 & 0_{3\times 3} \\ 0_{3\times 3} & \begin{bmatrix} j_{x,i} & 0 & 0 \\ 0 & j_{y,i} & 0 \\ 0 & 0 & j_{z,i} \end{bmatrix} \end{bmatrix},$$

where $i = 1, \cdots, 5$, id_3 and $0_{3\times 3}$ are the 3×3 identity and zero matrices, respectively, m_i is the mass of B_i, and $(j_{x,i}, j_{y,i}, j_{z,i})$ are the moments of inertia of B_i about the X, Y and Z axes of the coordinate frame attached to the centre of mass of B_i. Note that, we chose this coordinate frame such that its axes coincide with the principal axes of the body B_i. For the body B_i $(i = 2, \cdots, 5)$, since we assume a symmetric shapes with Y_i-axis being the axis of symmetry, we have $j_{x,i} = j_{z,i}$. Finally, in the coordinates chosen to identify the configuration manifold (joint parameters), we have the following matrix form for $\mathbb{F}L_q$

$$\mathbb{F}L_q = T_q^*(L_{F(q)^{-1}}F) \begin{bmatrix} h_{\mathfrak{e},1} & \cdots & 0 \\ \vdots & \ddots & \vdots \\ 0 & \cdots & h_{\mathfrak{e},5} \end{bmatrix} T_q(L_{F(q)^{-1}}F) = \begin{bmatrix} K_{11}(q) & \cdots & K_{15}(q) \\ \vdots & \ddots & \vdots \\ K_{51}(q) & \cdots & K_{55}(q) \end{bmatrix},$$

and the kinetic energy is calculated by

$$K_q(\dot{q}, \dot{q}) = \frac{1}{2}\dot{q}^T \mathbb{F}L_q \dot{q},$$

where, with an abuse of notation, $\dot{q}$ is the vector corresponding to the speed of the joint parameters.

We assume zero potential energy for this holonomic open-chain multi-body system, Hence, we have the Hamiltonian of the system as

$$H(q, p) = \frac{1}{2}p^T \mathbb{F}L_q^{-1} p,$$

where p is the vector of generalized momenta corresponding to the joint parameters.

In the following, we derive the reduced Hamilton's equation for this system, with the initial total momentum $\mu = \begin{bmatrix} 0 & \mu_1 & 0 & \mu_2 & 0 & 0 \end{bmatrix}^T \in se^*(3)$ represented in the dual of the standard basis for $se(3)$. That is, the system has a constant linear momentum in the direction of Y_0, equal to μ_1, and a constant angular momentum in the direction of X_0, equal to μ_2. The kinetic energy (and hence the Hamiltonian) of the this multi-body system is invariant under the action of $\mathcal{G} = \mathcal{Q}_1 = SE(3)$. The isotropy group corresponding to μ is

$$\mathcal{G}_\mu = \left\{ \mathfrak{h} = \begin{bmatrix} \cos(\theta_Y) & 0 & \sin(\theta_Y) & \frac{\mu_2}{\mu_1}\sin(\theta_Y) \\ 0 & 1 & 0 & y \\ -\sin(\theta_Y) & 0 & \cos(\theta_Y) & -2\frac{\mu_2}{\mu_1}\sin^2(\theta_Y/2) \\ 0 & 0 & 0 & 1 \end{bmatrix} \in SE(3) \right\},$$

which is a Lie subgroup of $\mathcal{G}$, and it is isomorphic to $SO(2) \times \mathbb{R}$. Now, consider the action of $\mathcal{G} = SE(3)$ by left translation on $\mathcal{Q}_1$. Using the joint parameters, $\forall (x_0, y_0, z_0, \theta_{X,0}, \theta_{Y,0}, \theta_{Z,0}) \in \mathcal{G}$ we have

$$\begin{aligned} \Phi_{(x_0,y_0,z_0,\theta_{X,0},\theta_{Y,0},\theta_{Z,0})}(q) = (&R_Y(\theta_{Y,0})R_X(\theta_{X,0})R_Z(\theta_{Z,0}) \begin{bmatrix} x & y & z \end{bmatrix}^T + \begin{bmatrix} x_0 & y_0 & z_0 \end{bmatrix}^T \\ &, R_Y(\theta_{Y,0})R_X(\theta_{X,0})R_Z(\theta_{Z,0})R_Y(\theta_Y)R_X(\theta_X)R_Z(\theta_Z), \overline{q}) \end{aligned}$$

where $\overline{q} = (\psi_X, \psi_Y, \psi_Z, \psi_1, \psi_2, \psi_3)$. We have the principal $\mathcal{G}$-bundle $\overline{\pi}\colon \mathcal{Q} \to \overline{\mathcal{Q}} = \mathcal{Q}_2 \times \cdots \times \mathcal{Q}_5$, and using the joint parameters its corresponding principal connection $\mathcal{A}\colon T\mathcal{Q} \to se(3)$ is defined by (5.29)

$$\mathcal{A}_q = \begin{bmatrix} R_Y(\theta_Y)R_X(\theta_X)R_Z(\theta_Z) & \widetilde{\begin{bmatrix} x \\ y \\ z \end{bmatrix}} R_Y(\theta_Y)R_X(\theta_X)R_Z(\theta_Z) \\ 0_{3\times 3} & R_Y(\theta_Y)R_X(\theta_X)R_Z(\theta_Z) \end{bmatrix} \left[T_{q_1} L_{q_1^{-1}} \; A_{\overline{q}} \right],$$

where we have

$$\widetilde{\begin{bmatrix} x \\ y \\ z \end{bmatrix}} = \begin{bmatrix} 0 & -z & y \\ z & 0 & -x \\ -y & x & 0 \end{bmatrix},$$

$$T_{q_1} L_{q_1^{-1}} = \begin{bmatrix} R_Z^{-1}(\theta_Z)R_X^{-1}(\theta_X)R_Y^{-1}(\theta_Y) & 0_{3\times 3} \\ 0_{3\times 3} & \begin{bmatrix} \cos(\theta_Z) & \cos(\theta_X)\sin(\theta_Z) & 0 \\ -\sin(\theta_Z) & \cos(\theta_X)\cos(\theta_Z) & 0 \\ 0 & -\sin(\theta_X) & 1 \end{bmatrix} \end{bmatrix},$$

$$A_{\overline{q}} = \left[\overline{K}_{11}(\overline{q})^{-1}\overline{K}_{12}(\overline{q}) \; \cdots \; \overline{K}_{11}(\overline{q})^{-1}\overline{K}_{1N}(\overline{q}) \right],$$

where $\overline{K}_{1i}(\overline{q}) = K_{1i}(e_1, \overline{q})$ for $i = 1, \cdots, N$, and consequently, the horizontal lift map $\mathrm{hl}_q\colon T_{\overline{q}}\overline{\mathcal{Q}} \to T_q\mathcal{Q}$ is

$$\mathrm{hl}_q = \begin{bmatrix} -\begin{bmatrix} R_Y(\theta_Y)R_X(\theta_X)R_Z(\theta_Z) & 0_{3\times 3} \\ 0_{3\times 3} & \begin{bmatrix} \cos(\theta_Z) & -\sin(\theta_Z) & 0 \\ \sin(\theta_Z)/\cos(\theta_X) & \cos(\theta_Z)/\cos(\theta_X) & 0 \\ \sin(\theta_Z)\tan(\theta_X) & \cos(\theta_Z)\tan(\theta_X) & 1 \end{bmatrix} \end{bmatrix} A_{\overline{q}} \\ id_6 \end{bmatrix},$$

where id_6 is the 6×6 identity matrix. Then, we use the principal bundle $\widetilde{\pi}\colon \mathcal{Q} \to \mathcal{Q}/\mathcal{G}_\mu$ to introduce the local trivialization of $\mathcal{G} = \mathcal{Q}_1$. The Lie algebra of $\mathcal{G}_\mu$ as a vector subspace of $se(3)$ is spanned by $\left\{E_2, \frac{\mu_2}{\mu_1}E1 + E_5\right\}$, and a complementary subspace to this subspace is spanned by $\{E_1, E_3, E_4, E_6\}$. Now, $\forall \widetilde{q}_1 \in U_\mu \subset \mathcal{Q}_1/\mathcal{G}_\mu$ we introduce the embedding $\chi_\mu\colon U_\mu \hookrightarrow \mathcal{Q}_1$

$$\chi_\mu(\widetilde{q}_1) = \begin{bmatrix} R_X(\theta_X)R_Z(\theta_Z) & \begin{bmatrix} x \\ 0 \\ z \end{bmatrix} \\ 0_{1\times 3} & 1 \end{bmatrix},$$

which identifies the elements of $\mathcal{Q}_1/\mathcal{G}_\mu$ by elements of an embedded submanifold of $\mathcal{Q}_1$, and in the local coordinates its induced map on the tangent bundles is

$$T_{\widetilde{q}_1}\chi_\mu = \begin{bmatrix} 1 & 0 & 0 & 0 \\ 0 & 0 & 0 & 0 \\ 0 & 1 & 0 & 0 \\ 0 & 0 & 1 & 0 \\ 0 & 0 & 0 & 0 \\ 0 & 0 & 0 & 1 \end{bmatrix}.$$

Subsequently, we define the local trivialization of the principal bundle $\widetilde{\pi}\colon \mathcal{Q} \to \mathcal{Q}/\mathcal{G}_\mu$ by $\widetilde{\chi}\colon \mathcal{G}_\mu \times U_\mu \to \mathcal{Q}_1$

$$\widetilde{\chi}((\mathfrak{h}, \widetilde{q}_1)) = \mathfrak{h}\chi_\mu(\widetilde{q}_1),$$

and its induced map on the tangent bundles (in the local coordinates) is calculated as

$$T_{(\mathfrak{h},\widetilde{q}_1)}\widetilde{\chi} = \begin{bmatrix} 0 & (\frac{\mu_2}{\mu_1} + z)\cos(\theta_Y) - x\sin(\theta_Y) & \cos(\theta_Y) & \sin(\theta_Y) & 0 & 0 \\ 1 & 0 & 0 & 0 & 0 & 0 \\ 0 & -(\frac{\mu_2}{\mu_1} + z)\sin(\theta_Y) - x\cos(\theta_Y) & -\sin(\theta_Y) & \cos(\theta_Y) & 0 & 0 \\ 0 & 0 & 0 & 0 & 1 & 0 \\ 0 & 1 & 0 & 0 & 0 & 0 \\ 0 & 0 & 0 & 0 & 0 & 1 \end{bmatrix},$$

where we use (y, θ_Y), $(x, z, \theta_X, \theta_Z)$, and $(x, y, z, \theta_X, \theta_Y, \theta_Z)$ as the local coordinates for the manifolds $\mathcal{G}_\mu$, $\mathcal{Q}_1/\mathcal{G}_\mu$, and $\mathcal{Q}_1$, respectively. Accordingly, we can calculate the map $A^\mu_{\widetilde{q}}\colon T_{(\widetilde{q}_1,\overline{q})}(U_\mu \times \overline{\mathcal{Q}}) \to Lie(\mathcal{G}_\mu)$ using the following equalities:

$$A^\mu_{\widetilde{q}} := \left[\widetilde{K}^{\mathcal{G}_\mu}_1(\widetilde{q})^{-1}\widetilde{K}^{\mathcal{Q}_1/\mathcal{G}_\mu}_1(\widetilde{q})\ \widetilde{K}^{\mathcal{G}_\mu}_1(\widetilde{q})^{-1}\widetilde{K}^{\mathcal{G}_\mu}_{12}(\widetilde{q})\ \cdots\ \widetilde{K}^{\mathcal{G}_\mu}_1(\widetilde{q})^{-1}\widetilde{K}^{\mathcal{G}_\mu}_{1N}(\widetilde{q})\right],$$

$$\begin{bmatrix} K^{\mathcal{G}_\mu}_1((\mathfrak{h},\widetilde{q})) & K^{\mathcal{Q}_1/\mathcal{G}_\mu}_1((\mathfrak{h},\widetilde{q})) \\ K^{\mathcal{G}_\mu}_2((\mathfrak{h},\widetilde{q})) & K^{\mathcal{Q}_1/\mathcal{G}_\mu}_2((\mathfrak{h},\widetilde{q})) \end{bmatrix} = T^*_{(\mathfrak{h},\widetilde{q}_1)}\widetilde{\chi}\left(K_{11}(\widetilde{\chi}(\mathfrak{h},\widetilde{q}))\right)T_{(\mathfrak{h},\widetilde{q}_1)}\widetilde{\chi},$$

$$\begin{bmatrix} K^{\mathcal{G}_\mu}_{12}((\mathfrak{h},\widetilde{q})) & \cdots & K^{\mathcal{G}_\mu}_{1N}((\mathfrak{h},\widetilde{q})) \\ K^{\mathcal{Q}_1/\mathcal{G}_\mu}_{12}((\mathfrak{h},\widetilde{q})) & \cdots & K^{\mathcal{Q}_1/\mathcal{G}_\mu}_{1N}((\mathfrak{h},\widetilde{q})) \end{bmatrix} = T^*_{(\mathfrak{h},\widetilde{q}_1)}\widetilde{\chi}\left[K_{12}(\widetilde{\chi}(\mathfrak{h},\widetilde{q}))\ \cdots\ K_{1N}(\widetilde{\chi}(\mathfrak{h},\widetilde{q}))\right].$$

And, we have $\widetilde{K}^{\mathcal{G}_\mu}_1(\widetilde{q}) = K^{\mathcal{G}_\mu}_1((e_\mu,\widetilde{q}))$, $\widetilde{K}^{\mathcal{Q}_1/\mathcal{G}_\mu}_1(\widetilde{q}) = K^{\mathcal{Q}_1/\mathcal{G}_\mu}_1((e_\mu,\widetilde{q}))$, and $\widetilde{K}^{\mathcal{G}_\mu}_{1\mathrm{i}}(\widetilde{q}) = K^{\mathcal{G}_\mu}_{1\mathrm{i}}((e_\mu,\widetilde{q}))$ for all $\mathrm{i} = 2, \cdots, N$. We also have the reduced Hamiltonian on $[T\widetilde{\pi}(\mathcal{V})]^0$:

$$\widetilde{H}(\widetilde{p}_{\widetilde{q}}) = \frac{1}{2}\begin{bmatrix} \mathrm{Ad}^T_{(e_\mu,\widetilde{q}_1)}\mu \\ \overline{p} + A^T_{\widetilde{q}}\mathrm{Ad}^T_{(e_\mu,\widetilde{q}_1)}\mu \end{bmatrix}^T \mathbb{F}L^{-1}_{(e_\mu,\widetilde{q}_1,\overline{q})}\begin{bmatrix} \mathrm{Ad}^T_{(e_\mu,\widetilde{q}_1)}\mu \\ \overline{p} + A^T_{\widetilde{q}}\mathrm{Ad}^T_{(e_\mu,\widetilde{q}_1)}\mu \end{bmatrix}, \tag{6.48}$$

where

$$\mathrm{Ad}^T_{(e_\mu,\widetilde{q}_1)}\mu = \begin{bmatrix} R^T_Z(\theta_Z)R^T_X(\theta_X) & 0_{3\times 3} \\ -R^T_Z(\theta_Z)R^T_X(\theta_X)\widetilde{\begin{bmatrix} x \\ 0 \\ z \end{bmatrix}} & R^T_Z(\theta_Z)R^T_X(\theta_X) \end{bmatrix}\begin{bmatrix} 0 \\ \mu_1 \\ 0 \\ \mu_2 \\ 0 \\ 0 \end{bmatrix}.$$

In order to calculate the 2-form Ξ_μ, we compute the following matrices in the local coordinates:

$$T_{\chi_\mu(\widetilde{q}_1)}R_{\chi_\mu(\widetilde{q}_1)^{-1}}(T_{\widetilde{q}_1}\chi_\mu) = \begin{bmatrix} 1 & 0 & 0 & z\sin(\theta_X) \\ 0 & 0 & z & -x\cos(\theta_X) \\ 0 & 1 & 0 & -x\sin(\theta_X) \\ 0 & 0 & 1 & 0 \\ 0 & 0 & 0 & -\sin(\theta_X) \\ 0 & 0 & 0 & \cos(\theta_X) \end{bmatrix},$$

$$\mathrm{Ad}_{\chi_\mu(\widetilde{q}_1)} = \begin{bmatrix} R_X(\theta_X)R_Z(\theta_Z) & \widetilde{\begin{bmatrix} x \\ 0 \\ z \end{bmatrix}} R_X(\theta_X)R_Z(\theta_Z) \\ 0_{3\times 3} & R_X(\theta_X)R_Z(\theta_Z) \end{bmatrix},$$

$$\mathcal{D}_{\widetilde{q}} := -A^\mu_{\widetilde{q}} + \left[T_{\chi_\mu(\widetilde{q}_1)}R_{\chi_\mu(\widetilde{q}_1)^{-1}}(T_{\widetilde{q}_1}\chi_\mu)\ \mathrm{Ad}_{\chi_\mu(\widetilde{q}_1)}A_{\overline{q}}\right],$$

$$\mathcal{F}_{\widetilde{q}_1} := \begin{bmatrix} 0 \\ \mu_1 \\ 0 \\ \mu_2 \\ 0 \\ 0 \end{bmatrix}^T \mathrm{Ad}_{\chi_\mu(\widetilde{q}_1)} = \begin{bmatrix} \mu_1\cos(\theta_X)\sin(\theta_Z) \\ \mu_1\cos(\theta_X)\cos(\theta_Z) \\ -\mu_1\sin(\theta_X) \\ \mu_1(z\cos(\theta_Z) - x\sin(\theta_X)\sin(\theta_Z)) + \mu_2\cos(\theta_Z) \\ -\mu_1(z\sin(\theta_Z) + x\cos(\theta_Z)\sin(\theta_X)) - \mu_2\sin(\theta_Z) \\ -\mu_1 x\cos(\theta_X) \end{bmatrix}^T.$$

Finally, we have the following expression for the 2-form Ξ_μ:

$$\begin{aligned} \Xi_\mu &= \sum_{i<j}\sum_{a=1}^{6}\mathcal{F}_a\left(\left(\frac{\partial A^a_j}{\partial \overline{q}_i} - \frac{\partial A^a_i}{\partial \overline{q}_j}\right) - \sum_{l<k}\mathcal{E}^a_{lk}(A^l_iA^k_j - A^l_jA^k_i)\right)(d\overline{q}_i \wedge d\overline{q}_j) \\ &\quad + \sum_{i'<j'}\sum_{l<k}\left((\mu_1\mathcal{E}^2_{lk} + \mu_2\mathcal{E}^4_{lk})(\mathcal{D}^l_{i'}\mathcal{D}^k_{j'} - \mathcal{D}^l_{j'}\mathcal{D}^k_{i'})\right)(d\widetilde{q}_{i'} \wedge d\widetilde{q}_{j'}) \\ &=: \sum_{i'<j'}\Upsilon_{i'j'}(\widetilde{q})d\widetilde{q}_{i'} \wedge d\widetilde{q}_{j'}, \end{aligned}$$

where $a, l, k, i, j \in \{1, \cdots, 6\}$ and $i', j' \in \{1, \cdots, 10\}$. Here, in the local coordinates $\widetilde{q} = (x, z, \theta_X, \theta_Z, \psi_X, \psi_Y, \psi_Z, \psi_1, \psi_2, \psi_3)$, $\overline{q} = (\psi_X, \psi_Y, \psi_Z, \psi_1, \psi_2, \psi_3)$, and for the standard basis for $se(3)$, i.e., $\{E_1, \cdots, E_6\}$, we have

$$\begin{aligned} [E_l, E_k] &= \sum_{a=1}^{6}\mathcal{E}^a_{lk}E_a, \\ \mathcal{F}_{\widetilde{q}_1} &= \sum_{a=1}^{6}\mathcal{F}_a(\widetilde{q}_1)E_a, \\ A_{\overline{q}} &= \begin{bmatrix} A^1_1(\overline{q}) & \cdots & A^1_6(\overline{q}) \\ \vdots & \ddots & \vdots \\ A^6_1(\overline{q}) & \cdots & A^6_6(\overline{q}) \end{bmatrix}, \\ \mathcal{D}_{\widetilde{q}} &= \begin{bmatrix} \mathcal{D}^1_1(\widetilde{q}) & \cdots & A^1_{10}(\widetilde{q}) \\ \vdots & \ddots & \vdots \\ \mathcal{D}^6_1(\widetilde{q}) & \cdots & \mathcal{D}^6_{10}(\widetilde{q}) \end{bmatrix}. \end{aligned}$$

As the result, in matrix form we have the following reduced equations of motion for the holonomic multi-body system under study:

$$\begin{bmatrix} \dot{\widetilde{q}}_1 \\ \dot{\widetilde{q}} \\ \dot{\overline{p}} \end{bmatrix} = \begin{bmatrix} \begin{bmatrix} 0 & -\Upsilon_{12}(\widetilde{q}) & \cdots & \cdots & -\Upsilon_{110}(\widetilde{q}) \\ \Upsilon_{12}(\widetilde{q}) & 0 & -\Upsilon_{23}(\widetilde{q}) & \cdots & -\Upsilon_{210}(\widetilde{q}) \\ \vdots & \cdots & \ddots & \cdots & \vdots \\ \Upsilon_{19}(\widetilde{q}) & \cdots & \Upsilon_{89}(\widetilde{q}) & 0 & -\Upsilon_{910}(\widetilde{q}) \\ \Upsilon_{110}(\widetilde{q}) & \cdots & \cdots & \Upsilon_{910}(\widetilde{q}) & 0 \end{bmatrix} & \begin{bmatrix} 0_{4\times 6} \\ -id_6 \end{bmatrix} \\ \begin{bmatrix} 0_{6\times 4} & id_6 \end{bmatrix} & 0_{6\times 6} \end{bmatrix}^{-1} \begin{bmatrix} \dfrac{\partial \widetilde{H}}{\partial \widetilde{q}_1} \\ \dfrac{\partial \widetilde{H}}{\partial \overline{q}} \\ \dfrac{\partial \widetilde{H}}{\partial \overline{p}} \end{bmatrix},$$

where $\widetilde{H}$ is calculated by (6.48).

7 Conclusions and Future Work

In this paper we systematically extended the existing reduction procedures for multi-body systems to more general cases with multi-d.o.f. holonomic joints and non-zero momentum, using the symplectic reduction theorem. Using Lie group theory, we reviewed the notion of displacement subgroups to introduce a class of multi-d.o.f. joints whose relative configuration manifolds are diffeomorphic to a subgroup of a Cartesian product of copies of $SE(3)$. We used the symplectic reduction theorem in geometric mechanics to express Hamilton's equation in the symplectic reduced manifold, for holonomic Hamiltonian mechanical systems. We then identified the symplectic reduced manifold with the cotangent bundle of a quotient manifold. Accordingly, we developed a two-step reduction process for the dynamical equations of open-chain multi-body systems with multi-d.o.f. holonomic joints and non-zero momentum, for which one symmetry group is indeed the relative configuration manifold corresponding to the first joint. As for the second step, we found some sufficient conditions, under which the kinetic energy metric is invariant under the action of a subgroup of the configuration manifold. Finally, we derived the reduced dynamical equations in the local coordinates for an example of a six d.o.f. manipulator mounted on a spacecraft to illustrate the results of this paper.

The reduction process introduced in this paper can be extended to nonholonomic multi-body systems through the Chaplygin reduction theorem, which will be the next step of this research.

References

1. Abraham, R.H., Marsden, J.E.: Foundations of Mechanics, 2nd edn. AMS Chelsea Pub./American Mathematical Society (2008)
2. Bloch, A.M.: Nonholonomic Mechanics and Control. Springer (2003)
3. Bullo, F.: Nonlinear control of mechanical systems: A riemannian geometry approach. Ph.D. thesis, California Institute of Technology (1999)
4. Bullo, F., Žefran, M.: On mechanical control systems with nonholonomic constraints and symmetries. Systems and Control Letter **45**(2), 133–143 (2002)
5. Cendra, H., Marsden, J.E., Ratiu, T.S.: Lagrangian Reduction by Stages, vol. 722. American Mathematical Society (2001)
6. Chen, C.K.: Nonholonomic control of coupled spatial multibody systems. Ph.D. thesis, Case Western Reserve University (1993)

7. Chhabra, R., Emami, M.R.: A generalized exponential formula for forward and differential kinematics of open-chain multi-body systems. Accepted Mechanism and Machine Theory (2013)
8. Cushman, R.H., Duistermaat, H., Śniatycki, J.: Geometry of Nonholonomically Constrained Systems. World Scientific Publishing Company (2009)
9. Dubowsky, S., Papadopoulos, E.: The kinematics, dynamics, and control of free-flying and free-floating space robotic systems. IEEE Transaction on Robotics and Automation **9**(5) (1993)
10. Duindam, V., Stramigioli, S.: Singularity-free dynamic equations of open-chain mechanisms with general holonomic and nonholonomic joints. Robotics, IEEE Transactions on **24**(3), 517–526 (2008)
11. Guillemin, V.W., Karshon, Y., Ginzburg, V.L.: Moment Maps, Cobordisms, and Hamiltonian Group Actions. American Mathematical Society (2002)
12. Hochgerner, S., Garcia-Naranjo, L.: G-chaplygin systems with internal symmetries, truncation, and an (almost) symplectic view of chaplygin's ball. Journal of Geometric Mechanics **1**, 35–53 (2009)
13. Jacobi, C.G.J., Clebsch, A.: Vorlesungen über dynamik. Chelsea Publishing Company (1969)
14. Kirillov, A.: An Introduction to Lie Groups and Lie Algebras. Cambridge University Press (2008)
15. Lee, J.M.: Introduction to Smooth Manifolds. Springer (2003)
16. Marsden, J.E.: Lectures on Mechanics. Cambridge University Press (1992)
17. Marsden, J.E., Misiolek, G., Ortega, J.P.: Hamiltonian Reduction by Stages, 1st edn. Springer-Verlag Berlin Heidelberg (2007)
18. Marsden, J.E., Ratiu, T.S.: Introduction to Mechanics and Symmetry: A Basic Exposition of Classical Mechanical Systems. Springer (1999)
19. Marsden, J.E., Scheurle, J.: Lagrangian reduction and the double spherical pendulum. Zeitschrift für Angewandte Mathematik und Physik **44**, 17–43 (1993)
20. Marsden, J.E., Scheurle, J.: The reduced euler-lagrange equations. Fields Institute Communications **1**, 139–164 (1993)
21. Marsden, J.E., Weinstein, A.: Reduction of symplectic manifolds with symmetry. Reports on Mathematical Physics **5**(1), 121 – 130 (1974)
22. Mukherjee, R., Chen, D.: Control of free-flying underactuated space manipulators to equilibrium manifolds. IEEE Transaction on Robotics and Automation **9**(5) (1993)
23. Nenchev, D., Umetani, Y., Yoshida, K.: Analysis of a redundant free-flying spacecraft/manipulator system. IEEE Transaction on Robotics and Automation **8**(1) (1992)
24. Noether, E.: Invariante variationsprobleme. Nachrichten von der Gesellschaft der Wissenschaften zu Göttingen, Mathematisch-Physikalische Klasse pp. 235–257 (1918)
25. Olfati-Saber, R.: Nonlinear control of underactuated mechanical systems with application to robotics and aerospace vehicles. Ph.D. thesis, Massachusetts Institute of Technology (2001)
26. Routh, E.J.: A Treatise on the Dynamics of a System of Rigid Bodies. With Numerous Examples: The Elementary Part. Macmillan (1882)
27. Shen, J.: Nonlinear control of multibody systems with symmetries via shape change. Ph.D. thesis, University of Michigan, Ann Arbor (2002)
28. Shen, J., McClamroch, N.H.: Translational and rotational maneuvers of an underactuated space robot using prismatic actuators. The International Journal of Robotics Research **21**(5-6), 607–620 (2002)
29. Shen, J., McClamroch, N.H., Bloch, A.M.: Local equilibrium controllability of multibody systems controlled via shape change. IEEE Transactions on Automatic Control **49**(4), 506–520 (2004)
30. Shen, J., Schneider, D.A., Bloch, A.M.: Controllability and motion planning of a multibody chaplygin's sphere and chaplygin's top. International Journal of Robust and Nonlinear Control **18**, 905?–945 (2008)
31. Sreenath, N.: Modeling and control of multibody systems. Ph.D. thesis, University of Maryland, College Park (1987)
32. Sreenath, N.: Nonlinear control of planar multibody systems in shape space. Mathematics of Control, Signals and Systems **5**(4), 343–363 (1992)
33. Stramigioli, S.: Modeling and IPC Control of Interactive Mechanical Systems - A Coordinate-Free Approach, 1st edn. Springer (2001)

34. Tortopidis, I., Papadopoulos, E.: On point-to-point motion planning for underactuated space manipulator systems. Robotics and Autonomous Systems **55**(2), 122 – 131 (2007)
35. Umetani, Y., Yoshida, K.: Resolved motion rate control of space manipulators with generalized jacobian matrix. IEEE Transaction on Robotics and Automation **5**(3) (1989)
36. Vafa, Z., Dubowsky, S.: On the dynamics of manipulators in space using the virtual manipulator approach. Proceedings of IEEE International Conference on Robotics and Automation pp. 579–585 (1987)
37. Wee, L., Walker, M.W., McClamroch, N.H.: An articulated-body model for a free-flying robot and its use for adaptive motion control. IEEE Transaction on Robotics and Automation **13**(2) (1997)